HamiltonJet

MARINE PROPULSION UNITS

Installation & Servicing Manual

MODEL 273

Jet Unit:	HJ 273
Part Number:	89273
Revision 1	18/04/97
Amendment 15	22/02/02

NOTE:

AMENDMENTS 9/10 OF THIS MANUAL ARE ONLY APPLICABLE TO JET UNITS FROM SERIAL No #9862 ONWARDS.

AMENDMENT RECORD

Part No: 89273
Jet Model: HJ 273
Manual : Installation & Servicing

Amdt	Incorporated By	Date
1.	C.W.F Hamilton & Co Ltd	6/06/97
2.	C.W.F Hamilton & Co Ltd	8/09/97
3.	C.W.F Hamilton & Co Ltd	8/09/97
4.	C.W.F Hamilton & Co Ltd	11/11/97
5.	C.W.F Hamilton & Co Ltd	06/02/98
6.	C.W.F Hamilton & Co Ltd	10/06/98
7.	C.W.F Hamilton & Co Ltd	30/09/98
8.	C.W.F Hamilton & Co Ltd	10/11/98
9.	C.W.F Hamilton & Co Ltd	27/11/98
10.	C.W.F Hamilton & Co Ltd	01/12/98
11.	C.W.F Hamilton & Co Ltd	10/02/99
12.	C.W.F Hamilton & Co Ltd	21/04/99
13.	C.W.F Hamilton & Co Ltd	24/05/99
14.	C.W.F Hamilton & Co Ltd	30/06/99
15.	[illegible]	21/02/02
16.		
17.		
18.		
19.		
20.		
21.		
22.		
23.		
24.		
25.		
26.		
27.		
28.		
29.		
30.		
31.		
32.		
33.		
34.		
35.		
36.		
37.		
38.		
39.		
40.		
41.		
42.		
43.		
44.		

Amdt	Incorporated By	Date
45.		
46.		
47.		
48.		
49.		
50.		
51.		
52.		
53.		
54.		
55.		
56.		
57.		
58.		
59.		
60.		
61.		
62.		
63.		
64.		
65.		
66.		
67.		
68.		
69.		
70.		
71.		
72.		
73.		
74.		
75.		
76.		
77.		
78.		
79.		
80.		
81.		
82.		
83.		
84.		
85.		
86.		
87.		
88.		

Warranty

The Company warrants each new Hamilton product to be free from defects in materials and workmanship under normal use and service, its obligations under this Warranty being limited to make good at its factory or at the factory of any subsidiary or branch of the Company the product or any part or parts thereof which shall be returned to it with transportation charges prepaid and which its examination shall disclose to its satisfaction to have been defective provided or such part or parts thereof shall be so returned to it not later than 24 months from the date of the original purchase from the Company or its authorised distributor, or 12 months from commissioning date, whichever occurs first. No allowance shall be granted for any repairs or alterations made by the purchaser or its agent without the written consent of the Company. This Warranty is expressly in lieu of all other warranties expressed or implied and of all other obligations or liabilities on its part, including any liability under the Sale of Goods Act, 1908, and no other person or agent or dealer is authorised to give any other condition or warranty to assume for the Company any other liability in connection with the sale of its products whether new or second hand. Any obligation on the part of the Company under this Warranty does not apply to any Hamilton product which may have been repaired or altered in any way outside the factory of the Company or to damages caused in the opinion of the Company by overloading, misuse, misapplication, improper storage, abnormal wear and tear due to exposure to the elements, negligence, accident, or whilst being operated in any other way other than in accordance with the operating and maintenance instructions of the Company nor does it apply to repairs made necessary by the use of parts or accessories not recommended by the Company. There is no liability on the part of the Company with respect to any items incorporated in any Hamilton product when such items have been manufactured by others and are warranted by their respective manufacturers in favour of the purchaser or when they are supplied by the Company on special order. The Company shall not be liable for any consequential loss or damage resulting directly or indirectly from any defect in the product the subject of this agreement. No liability on the part of the Company with respect to this Warranty shall extend to second - hand and reconditioned goods and the Warranty does not cover the cost of labour involved in the replacement of defective parts. No liability on the part of the Company with respect to this Warranty shall exist if the Hamilton product is not, in the opinion of the Company, installed as per the "Installation and Service Manual", "Designer's Manual" and/or "Owners Manual" supplied with each product. Warranty will not apply unless a negative earth bonding system has been installed in the vessel and a mainshaft critical speed check carried out to the Company's satisfaction.

C.W.F. HAMILTON & Co. Ltd.

This portion must be completed in every detail and returned immediately to:
C.W.F. HAMILTON & CO LTD, PO BOX 709, CHRISTCHURCH, NEW ZEALAND.

- -

Purchaser ....

Address ....

Hamilton Jet Model .... Serial number ....

Signed .... Date ....

Dealer ....

Delivery date .... Dealer's signature ....

GENERAL SAFETY NOTICE

The specific safety warnings and cautions summarised below appear in appropriate sections of this manual. Each is referenced to the text by the Section and Page on which it appears.

WARNINGS

A WARNING: is an operation or maintenance procedure, practice condition or statement, which if not strictly observed, could result in injury or death to personnel.

This is a list of standard Warnings that will be found throughout this Manual. C.W.F. Hamilton & Co Ltd advise that in the interests of safety, these Warnings be read and understood prior to commencement of any maintenance or overhaul activities on the Jet Units / Controls Systems described within this Manual.

WARNING:

THE JET UNIT THRUST BEARING MUST NOT BE SUBJECTED TO EXCESSIVE RADIAL LOADS CAUSED BY:-

1. ADAPTORS AND BELT PULLEYS OVERHANGING THE JET UNIT COUPLING FLANGE.
2. RIGID DRIVELINES WHICH DO NOT ACCOMMODATE MISALIGNMENT CAUSED BY GEARBOX MOVEMENT.
3. DRIVESHAFT WEIGHT THAT CAN BE SUPPORTED BY THE JET.

1.7

WARNING:

ENSURE THAT THE VESSEL IS SECURELY MOORED DURING COMMISSIONING. AS THE JET UNITS MAY PRODUCE LARGE THRUST FORCES.

DO NOT PROCEED IF ANY CONTROL SYSTEM FAULT ALARMS ARE STILL ACTIVATED.

3.1

WARNING:

SELECTING 'ASTERN' (CRASH STOP) WHILE THE VESSEL MOVING AHEAD AT HIGH SPEED CAN PRODUCE A VERY RAPID DECELERATION.

NEW OPERATORS SHOULD USE THE "CRASH STOP" FEATURE VERY CAREFULLY.

DO NOT USE FULL HELM CONTROL UNTIL THE VESSEL HAS SLOWED.

SELECT ZERO SPEED AND REDUCE THROTTLE AS SOON AS THE VESSEL HAS SLOWED.

4.7.

WARNING:

EXTREME CARE IS REQUIRED WHENEVER THE INSPECTION COVER IS REMOVED AS WATER MAY ENTER THE VESSEL THROUGH THIS OPENING. NEVER LEAVE THE INSPECTION COVER REMOVED WITHOUT CONSTANT MONITORING OF THE WATER LEVEL.

4.10, 4.11, 6.4, & 8.8.

WARNING:

EXERCISE EXTREME CARE IF WATER SEAL REPLACEMENT IS TO BE CARRIED OUT IN THE VESSEL AS WATER MAY ENTER THE VESSEL THROUGH THE INTAKE OPENING. NEVER LEAVE THE INSPECTION COVER REMOVED.

8.1.

CAUTIONS

***A CAUTION:** is an operation or maintenance procedure, practice condition or statement which, if not strictly observed, could result in damage to, or destruction of, equipment or loss of mission effectiveness.*

This is a list of standard Cautions that will be found throughout this Manual. C.W.F. Hamilton & Co Ltd advise that these Cautions should be read and understood prior to commencement of any maintenance on the Jet Units / Controls Systems described within this Manual.

SECTION 1.

CAUTION:

Not all Hull shapes are suitable for propulsion by water jets. Some advice on suitable Hull shapes, estimating performance and engine matching is provided in the Designers Manual.

1.4.

SECTION 2.

CAUTION:

Prevention of Corrosion

The Jet Unit has been designed to withstand the corrosive effects of operation in salt water through the use of materials that are resistant to salt water corrosion and by the placement of sacrificial anodes in suitable locations.

Vessels using Hamilton Jet Units must be bonded and wired as described in this Section to prevent corrosion occurring due to the presence of stray currents or due to galvanic interactions along the shore power grounding conductor.

2-1.

CAUTION:

In Multi Jet Unit installations, each Jet Unit is specifically assembled for Port, Starboard or Centre mounting and are matched to their individual Intake Blocks. Care should be taken to ensure that each Jet is fitted onto the correct Intake Block.

2.2.

CAUTION:

If a gearbox or clutch are fitted to the engine, a conventional Hull water pick-up and engine raw water pump must be used.

2.6.

CAUTION:

Ensure that the water pick up is not directly ahead of the Jet Unit Intake, but well to the side to avoid turbulent water flow into the Jet Unit.

2.6.

SECTION 3.

CAUTION:

If a problem is detected, then return to mooring immediately at reduced power. Do not operate the Jet Unit until the fault has been repaired. Refer to Section 5 *Faultfinding*.

3-2.

SECTION 4.

CAUTION:

Never stop the Engine(s), or disengage the drive to the Jet Unit, when approaching a mooring or at any time when control of the vessel may be required.

4.1.

CAUTION:

Running at speed with a partially blocked Inlet Grill or debris on the Impeller will result in cavitation damage to the Jet Unit

4.6, 4.9.

CAUTION:

If in lightweight planing vessel, which is moving forward at speed, the "Astern" or "Zero Speed" positions are selected with the throttle left open, the resultant "Braking Effect" is very severe - even more so than full braking with a motor car.

4.7.

CAUTION:

Do not run the Jet if the vessel has run aground. Damage may occur to Impellers.

4.8.

CAUTION:

Ensure the water level is below the Inspection Cover level before removing the Inspection Cover.

4.9.

CAUTION:

Before removing the Inspection Cover:-

a) Stop all engines.
b) Check that the static water level will be below the Intake Inspection Cover lip.
c) If the static water level is too high, ballast should be placed on the bow to raise the stern high enough to allow the Intake Inspection Cover to be removed.
d) Alternatively, an optional extra Overflow Preventer can be fitted to the inspection point to allow inspection of the Intake Housing at higher water levels.

4.11.

SECTION 5.

Nil.

SECTION 6.

CAUTION:

The Jet Unit cannot be run out of the water, unless fitted with a Dry Run Kit.

6.2.

CAUTION:

Before moving any Controls, ensure that any marine growth is removed from the Steering and Reverse Linkage Rods. This will prevent damage to the seals that these Controls Rods pass through.

6.2.

CAUTION:

ANTI FOULING PAINTS

Do not use copper- based anti-fouling paints. Tin base antifouling paints are suitable or any paint suitable for an aluminium hull. Leave all stainless steel parts polished and unpainted. Do not paint over anodes.

ANTI-SEIZE COMPOUNDS:

Do not use graphite based anti-seize compounds - these will cause corrosion.

6.5.

CAUTION:

Tightening Torques: **Ensure all fasteners as tightened to torques as described in Drawing 85113 or relevant assembly drawings.**

6.8.

SECTION 7.

CAUTION:

Prevention of Corrosion

The Jet Unit has been designed to withstand the corrosive effects of operation in salt water through the use of materials that are resistant to salt water corrosion and by the placement of sacrificial anodes in suitable locations.

Vessels using Hamilton Jet Units must be bonded and wired as described in this Section to prevent corrosion occurring due to the presence of stray currents or due to galvanic interactions along the shore power grounding conductor.

7.1.

CAUTION:

An isolation transformer or a galvanic isolator must be correctly fitted to the vessel electrical system if the vessel is to be connected to an external AC shore supply.

7.2.

CAUTION:

ANTI FOULING PAINTS:
Do not use copper oxide based anti-fouling paints. Tin base anti-fouling paints are suitable or anti-fouling paint suitable for an aluminium hull as recommended by the paint manufacturer. Leave all stainless steel parts polished and unpainted. Do not paint over the anodes.

ANTI-SEIZE COMPOUNDS:
Do not use anti-seize compounds which are based on graphite, nickel or copper flakes- these will cause corrosion. Anti-seize compounds, usually containing zinc flakes, are available for aluminium.

7.5.

CAUTION:

For steel and carbon fibre reinforced GRP hulls, the Jet Unit must be electrically insulated from the Hull.

7.6.

SECTION 8.

CAUTION:

Exercise extreme care if the Bearing Housing is overhauled with the vessel afloat, as water may enter the Vessel through the opening in the Jet Intake.

8.1.

CAUTION:

The Water Seal should not be removed unless it is being replaced. The Water Seal will not perform correctly if it is removed and then reinstalled.

The Water Seal need only be replaced if it is leaking, or there is insufficient material left to last to the next inspection. Refer to Section 6. Maintenance, for details of the inspection *required*.

8.2.

CAUTION:

All Water seal faces must be clean and free of dirt, oil and grease.

8.3.

CAUTION:

Avoid using excessive heat during welding.

8.24.

CONTENTS

INTRODUCTION

- Cover Page
- Amendment Record
- Warranty Statement
- Warnings And Cautions
- Contents List
- List Of Drawings
- Appendix
  APPENDIX 1 - CONVERSION CHART

1. DESIGN BASICS

1.1. INTRODUCTION AND PRODUCT DESCRIPTION

1.2. PROPULSION SYSTEM DESIGN

1.3. HULL DESIGN
1.3.1. Mono Hulled Vessel
1.3.2. Multi Hulled Vessel
1.3.3. Trim Tabs
1.3.4. Engine Exhausts

1.4. DRIVELINES
1.4.1. Requirements of Driveline
1.4.2. Engineering Checks
1.4.3. Driveshaft Options
1.4.4. Universal Driveshaft Alignment
1.4.5. Jet Coupling Flange Details
1.4.6. Moments of Inertia
1.4.7. Critical Speed of Mainshaft

1.5. JET MAINSHAFT ALIGNMENT

1.6. COOLING WATER OFF TAKE

1.7. DESCRIPTION OF THE DRY RUN SYSTEM (OPTIONAL)
1.7.1. Installation
1.7.2. Corrosion
1.7.3. Scope of Use
1.7.4. Fault Finding
1.7.5. Maintenance
1.7.6. Parts List

2. INSTALLATION

2.1. BASIC INSTALLATION METHOD AND DRAWING REFERENCES

2.2. HULL PREPARATION
2.2.1. Fixing the Intake Block to the Hull
2.2.2. Transom Preparation

2.3. MOUNTING THE JET UNIT
2.3.1. Mounting the Jet Unit (Fibre Glass, Wooden and Aluminium Hull)
2.3.2. Mounting the Jet Unit (Steel Hull)
2.3.3. Assembly of the Transom Seal (Fibreglass, Wooden and Aluminium Hulls)
2.3.4. Assembly of the Transom Seal (Steel Hulls)

2.4. REVERSE DUCT FITTING

2.5. REVERSE CYLINDER FITTING

2.6. ENGINE INSTALLATION
2.6.1. Mounting the Engine
2.6.2. Engine Cooling
2.6.3. Exhaust Systems

3. COMMISSIONING

3.1. PRE-LAUNCH CHECKS

3.2. POST LAUNCH CHECKS

3.3. SPEED AND HANDLING TRIALS
3.3.1. Before Leaving the Mooring
3.3.2. Propulsion System Check

3.4. POST TRIALS INSPECTION

4. OPERATION

4.1. STARTING UP

4.2. STEERING
4.2.1. Total Hydraulic Failure

4.3. MANOEUVERING AND DOCKING
4.3.1. Low Speed Manoeuvering and Docking
4.3.2. Moving Sideways.

4.4. CRUISING

4.5. "AHEAD" / "ZERO SPEED" / "ASTERN" CONTROLS

4.6. SHALLOW WATER OPERATION

4.7. ACCELERATION TO HIGH SPEED.

4.8. AERATED WATER

4.9. BLOCKAGES (DEBRIS IN THE JET UNIT)
4.9.1. Avoiding Blockages
4.9.2. Detecting Blockages
4.9.3. Clearing Blockages
4.9.4. Using the Inspection Cover
4.9.5. Hatch Extension

4.10. OPERATING WITH AN ENGINE & JET UNIT OUT OF SERVICE

5. FAULT FINDING

6. MAINTENANCE : GENERAL

6.1. PRESERVATION: (PRE- INSTALLATION)

6.2. PRESERVATION: (POST INSTALLATION)

6.3. SERVICING INTERVALS
6.3.1. Daily "Pre Use" Servicing Checks

6.4. JET UNIT SERVICING DETAILS

6.5. TOOLS
6.5.1. Standard Recommended Tools
6.5.2. Special Tools

6.6. THREADED FASTENERS

6.7. RECOMMENDED LUBRICANTS

7. PRECAUTIONS AGAINST CORROSION

7.1. GENERAL
7.1.1. Electrical Wiring System
7.1.2. Earth Bonding System
7.1.3. Corrosion Monitor
7.1.4. Earth Plate Connections For Electronic Transmitting Equipment
7.1.5. Zinc Anodes
7.1.6. In Service Checks
7.1.7. Anti Fouling Paint / Anti Seize Compound
7.1.8. Impressed Current Protection

7.2. ALUMINIUM, G.R.P. AND WOOD HULLS (OTHER THAN STEEL)
7.2.1. Earth Bonding System - (Not Normally Current Conducting)

7.3. STEEL HULLS AND CARBON FIBRE REINFORCED GRP HULLS
7.3.1. Earth Bonding System (Not Normally Current Conducting)
7.3.2. Checking the Insulation

8. OVERHAUL

8.1. BEARING HOUSING ASSEMBLY OVERHAUL
8.1.1. Bearing Housing Dismantling
8.1.2. Re-Assembly of Water Seal:
8.1.3. Re-Assembly of the Bearing Housing

8.2. SCREEN RAKE ASSEMBLY OVERHAUL (IF FITTED)
8.2.1. Screen Rake Removal
8.2.2. Screen Rake Refitting
8.2.3. Screen Rake Blanking Plugs

8.3. HATCH EXTENSION
8.3.1. Hatch Extension Fitting
8.3.2. Hatch Extension Removal

8.4. REVERSE ASSEMBLY OVERHAUL
8.4.1. Reverse Duct Removal
8.4.2. Reverse Cylinder Removal
8.4.3. Dismantling the H.S.R.X. Reverse Cylinder
8.4.4. Assembly of the H.S.R.X. Reverse Cylinder
8.4.5. Reverse Cylinder: Refit to Jet Unit
8.4.6. Reverse Duct: Refit to Jet Unit

8.5. STEERING ASSEMBLY - OVERHAUL
8.5.1. Steering Cylinder Removal
8.5.2. Steering Cylinder Refit to Jet Unit.
8.5.3. Steering Assembly Removal
8.5.4. Nozzle / Nozzle Housing Removal
8.5.5. Nozzle / Nozzle Housing Refit
8.5.6. Steering Assembly Refit

8.6. TRANSOM SEAL ASSEMBLY OVERHAUL
8.6.1. Transom Seal Removal
8.6.2. Transom Seal Re-Fitting

8.7. TAILPIPE AREA - OVERHAUL
8.7.1. Impeller - Checking for Wear
8.7.2. Tailpipe Area - Dismantling
8.7.3. Wear Ring - Replacement
8.7.4. Impeller Overhaul
8.7.5. Tail Pipe and Nozzle: Re-Assembly

HJ 273 #89273 List of Drawings

Drawings contained within this Drawings Package.

Drawing Number	Amdt Status	Up-Issued
HJ 273 01 001 2 Shts	D	19/10/99
HJ 273 01 004 2 Shts	E	19/10/99
HJ 273 02 001	A	11/3/97
HJ 273 02 006	O	21/1/98
HJ 273 03 001	C	22/04/99
HJ 273 06 001	F	23/03/99
HJ 273 07 001 2 Shts	K	04/04/01
HJ 273 08 001 2 Shts	O	12/12/97
HJ 273 08 002 2 Shts	O	12/12/97
HJ 273 09 001	O	12/12/97
HJ 273 09 002	O	12/12/97
HJ 273 10 004	A	12/12/97
61485	O	13/11/95
63974	O	28/8/95
85018	H	17/01/00
85080	B	24/9/96
85113	A	30/05/01
85114	B	23/11/99
85144	A	01/12/00

Position of Marker Tabs

Jet Drawings

Basic Jet

Couplings

Impellers & Inserts

Steering

Reverse

Installation

Other

1. Design Basics

1.1. INTRODUCTION AND PRODUCT DESCRIPTION

THE HAMILTON WATER JET SYSTEM

Introduction:

In the modern world, water jets have rapidly gained acceptance as the leading means of propulsion for all types of high-speed marine craft including ferries, workboats, patrol craft and pleasure boats. Recent advances in water jet technology have put them ahead of conventional propeller systems in both high-speed performance and also reliability. Modern water jet powered vessels offer many advantages, such as high efficiency, rapid acceleration, shallow draft, unrivalled manoeuvrability and smooth, quiet operation. Whilst conventional propeller powered craft have several shortcomings, such as vibration, higher engine loading and susceptibility to damage from water borne debris, water jets generally offer lower maintenance, longer engine life and simplified installation.

Hamilton Jet pioneered the commercial development of the modern water jet system in the early 1950's and today has over 25,000 units installed worldwide. With a complete range of models suitable for power inputs of up to 3000 kW per unit, Hamilton water jets are ideally suited to the efficient propulsion of a wide variety of high speed vessels, in either single or multiple configuration, typically from 5 to 50 meters in length.

Hamilton Jet is dedicated to the production of the highest quality water jets and controls systems designed and manufactured to meet the requirements of the worlds leading certifying authorities. Full logistic support for projects is provided by the global Hamilton Jet organisation through factory support staff, regional offices and an extensive network of factory trained distributors in over 50 locations worldwide.

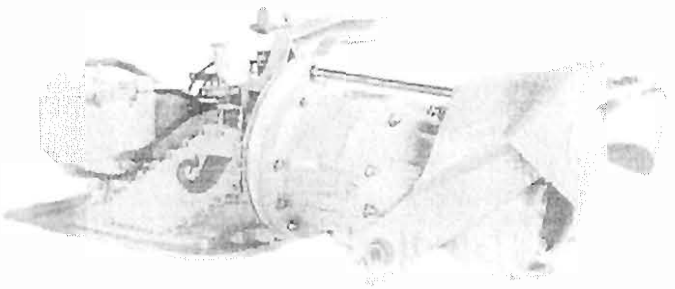

Modern Hamilton Jet circa 1995

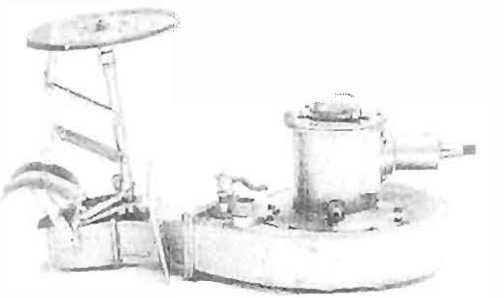

Hamilton Quinnat Jet circa 1953

Equipment Description:

The Hamilton HJ Series is a range of highly efficient single stage water jets suitable for propelling craft typically up to 20 meters in length and 30 tonnes displacement, at speeds up to 50 knots. HJ Series water jets are generally directly driven by high speed diesel engines. The HM Series are larger single stage water jets suitable for vessels typically up to 50m in length and are generally driven by high speed diesel engines via a reduction gearbox.

Mounted partly inboard at the stern of the vessel, the Hamilton water jet consists of a totally integrated package with steering and reverse mechanisms and jet mounted control system hydraulic equipment. Water is drawn into the water jet through an intake screen at the base of the intake, which is mounted flush with the hull bottom. The pumping unit (impeller + stator) increases the pressure or "head" of the flow, which is then discharged at high velocity at the nozzle. The reaction to this high velocity jet stream provides the net thrust force, which is fully transmitted through the intake to the hull bottom.

A single piece balanced steering nozzle precisely directs the jet stream as commanded by the helm, providing high turning forces to either port or starboard. An independent split-duct type reverse deflector, usually hydraulically actuated, directs the jet stream back underneath the hull to provide

powerful astern thrust. The reverse duct may be set to a "zero speed" position (where the ahead and astern thrusts are balanced) at which point full steering is still available. Infinitely variable forward and reverse thrust may be selected by varying the position of the reverse duct and combined with the highly efficient steering, results in unparalleled vessel control and manoeuvrability.

A vessel fitted with a Hamilton water jet has the minimum possible draft, with no protruding underwater appendages. This allows operation in shallow waters and in water with floating debris that may foul or damage a typical propeller driven vessel and also means increased safety for personnel working in the water near the vessel. The water jet unit is an ideal form of propulsion for vessels working in a marine mammal environment.

Main Components:

INTAKE AND INTAKE BLOCK

The main body of the Jet Unit is cast from high silicon aluminium alloy. The Intake casting has a lower flange, which mounts to a cast Intake Block. The Intake Block is welded or glassed into the craft Hull. The intake opening incorporates the protective Intake Screen.

The Intake has been designed with an integral oil cooler cast into the port side of the Intake. This cooler provides a cooling facility for oil from the Reverse Controls System and is connected to the Hydraulic Pump and Reverse Controls System via hydraulic hoses.

OIL COOLER

The Intake has been designed with an integrated oil cooler cast into the port side of the Intake. This cooler provides a cooling facility for oil from the Reverse Controls System and is connected to the Hydraulic Pump and Reverse Controls System via hydraulic hoses.

THRUST BEARING AND WATERSEAL

A Thrust Bearing inside the Bearing Housing absorbs thrust generated from the Mainshaft. No separate thrust bearing is required. Behind the Thrust Bearing on the Mainshaft is the Mechanical Water Seal, which prevents water entering the Bearing and the vessel. Beneath the Bearing Housing there is a drain hole for the seal. Any water appearing here indicates the Water Seal needs attention.

COUPLING & DRIVESHAFT

A Coupling is attached to the Mainshaft forward of the Bearing Housing. A variety of Couplings can be chosen to suit the Driveshaft used. The Driveshaft must possess axial and radial flexibility.

IMPELLER & IMPELLER RACE

The cast stainless steel Impeller runs inside the cast Impeller Race, which is fitted with a replaceable Wear Ring. A range of Impellers has been designed using computer programs. These are matched to the kW/rpm output of the Marine Diesel Engine.

TAILPIPE

Behind the Impeller Race is the tapered Tailpipe. The Tailpipe contains the Marine Bearing, which supports the Mainshaft. This is a water lubricated Rubber Bearing. The Tailpipe also contains the stator vanes, which straighten the water flow from the Impeller.

TRANSOM SEAL

The Transom Seal serves to seal the hole in the vessel Transom where the Jet Unit passes through. It is bolted to the vessel Transom and incorporates a flexible element which contacts and seals around the Intake.

NOZZLE

The Nozzle finally converges the water after it has passed through the tapering Tailpipe. The Nozzle size is critical to the correct operation of the pump in a given application. A removable Nozzle Insert inside the Nozzle allows modifications to the Nozzle size.

STEERING NOZZLE

The Steering Nozzle is attached by vertical pivot pins to the Nozzle. It is rotated to Port or Starboard by linkages attached to the inboard Steering Cylinder. The Steering Cylinder is part of the Control Equipment and is not included in this description. The Steering Nozzle has a Steering Nozzle Insert attached which is chosen to match the size of the emerging water jet to maximise steering efficiency.

REVERSE DUCT

The Reverse Duct is attached by horizontal pivot pins to the Tailpipe. It can be positioned up or down by the single inboard Reverse Cylinder.

SCREEN RAKE

The HJ-273 Jet Unit can be fitted with a Screen Rake as an accessory item. The Screen Rake is a foot operated item which attaches to mounting points on the side of the Intake Block.
The Screen Rake fits over the Intake Screen and enables objects caught in the Screen to be dislodged without having to remove the Inspection Hatch Cover. The spring return foot pedal for operating the Screen Rake is mounted on the port side of the Intake casing.

DRY RUN KIT (OPTIONAL EXTRA)

NOTE:

Hamilton Jet Units are not fitted with the Dry Run Kit as a standard fit. The Dry Run Kit is an optional extra, which can be fitted to the Jet Unit at the customer's request. Refer to Section 1.6. "Description of the Dry Run System (Optional)". Should the customer require a Dry Run System, it can be purchased at additional cost and should be requested when the Initial Jet Order is placed.

The Dry Run System is a simple solution to the problem of starting a boat engine before putting the vessel in the water. It is particularly useful for Man-Overboard boats and Lifeboats where it is important to ensure that the engine will start before the vessel is in the water.

The Dry Run Kit consists of a specially formulated Bearing, which can be run dry for short periods and run for long periods with water lubrication. The Bearing runs on a specially hardened Mainshaft. A special seal replaces the standard bronze or stainless steel Water Seal. **The standard rubber Marine Bearings are designed to run in a water immersed environment where the water acts as a coolant and lubricant for the Bearing and Water Seal. This type of Marine Bearing cannot be run out of water.**

HATCH EXTENSION (OPTIONAL EXTRA)

NOTE:

Hamilton Jet Units are not fitted with the Hatch Extension Kit as a standard fit. The Hatch Extension Kit is an optional extra, which can be fitted to the Jet Unit at the customers request. Refer to Section 4.9.5. "Hatch Extension" and Section 8.3. "Hatch Extension" for further information.
Should the customer require a Hatch Extension Kit fitted to his Jet Units, it can be purchased at additional cost and should be requested when the Initial Jet Order is placed.

The Inspection Hatch Extension Kit is for use with Jet Units where the water level is above the normal level of the Inspection Cover. It provides an increase of approximately 140 mm in allowable water level height.

The Inspection Hatch Extension Kit is an optional extra which can be fitted to the Jet Unit at the customers request and can be purchased at additional coat. This Item should be requested when the Initial Jet Order is placed.
The Inspection Hatch Extension Kit is attached to the top of the Intake Casing in place of the Inspection Cover. The Inspection Cover is then fitted to the top of the Hatch Extension.

1.2. PROPULSION SYSTEM DESIGN

JET UNIT SELECTION

Jet Unit selection is a complex task and C.W.F. Hamilton should be consulted for advice in all cases.

1.3. HULL DESIGN

CAUTION:

Not all Hull shapes are suitable for propulsion by water jets. Some advice on suitable Hull shapes, estimating performance and engine matching is provided in the Designers Manual.

1.3.1.Mono Hulled Vessel

1. Aerated water generated by the vessel's bow wave must not pass directly aft to the Jet Unit intake(s).

   a) A vee'd bow stem in conjunction with 10° minimum deadrise angle is recommended.
   b) Mount multiple Jet Units as close to the keel line as possible. ("staggered" engines can allow closer centres).
   c) Planing strakes, keelsons, "plank keels" and any other appendage that may create turbulent flow into the Jet Unit(s) must be removed from the hull bottom in front of and adjacent to the Jet Unit Intakes. Refer to the figure below.

2. For speeds over 30 knots, monohedron (constant Deadrise) hulls are recommended for directional stability without appendages.

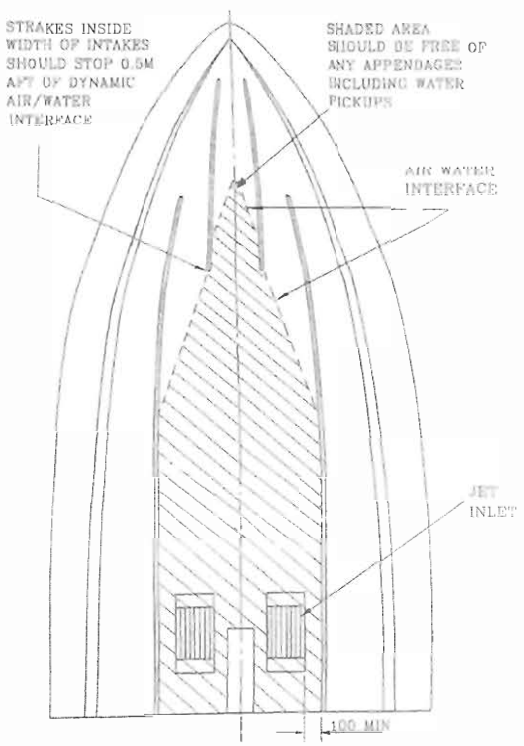

3. Displacement speed and warped plane (reducing Deadrise going aft) hulls may need additional directional stability. Twin 'bilge keels' are normally sufficient and these do not increase draft or interfere with water flow into the jet intake.
4. Immersion. The Jet Unit must be immersed with the water line at least up to the underside of the Mainshaft (at the Impeller) in order to prime the unit when the engine is started.
5. Minimum distances between Jets for multiple installations.
   a) For twin Jets; Dimension "B" = 800 for 0 to 25° deadrise angles.
   b) For triple Jets; Dimension "A" = 670 for 0 to 25° deadrise angles.
   c) For applications using more than three Jets consult **C.W.F Hamilton & Co Ltd** for distances between Jets.

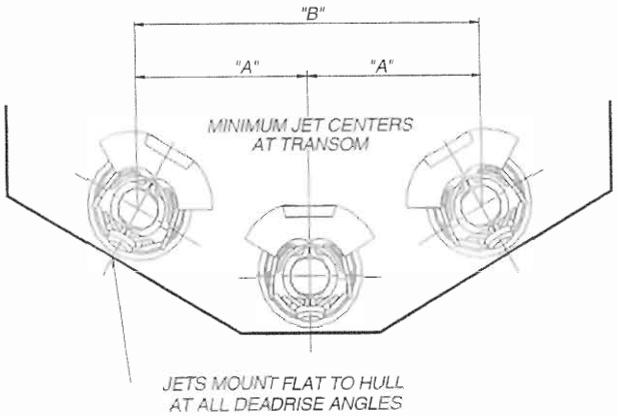

1.3.2.Multi Hulled Vessel

Jet Units may be fitted in catamaran and **some** trimaran hulls. Air entrainment between the hulls occurs with these vessels. Care must be taken to ensure that this entrained air does not enter the Jet Unit intakes(s). This is alleviated if the hulls are deep in relation to the air tunnels so that the Jet Unit sit well down in the water, as indicated on the following diagram. The Reverse Duct when in the "up" (ahead) position must not project beyond the sidewalls of a catamaran or trimaran hull, or, substantial drag may be caused.

Consult with C.W.F. Hamilton in all cases if Jet Units are proposed in these types of hull.

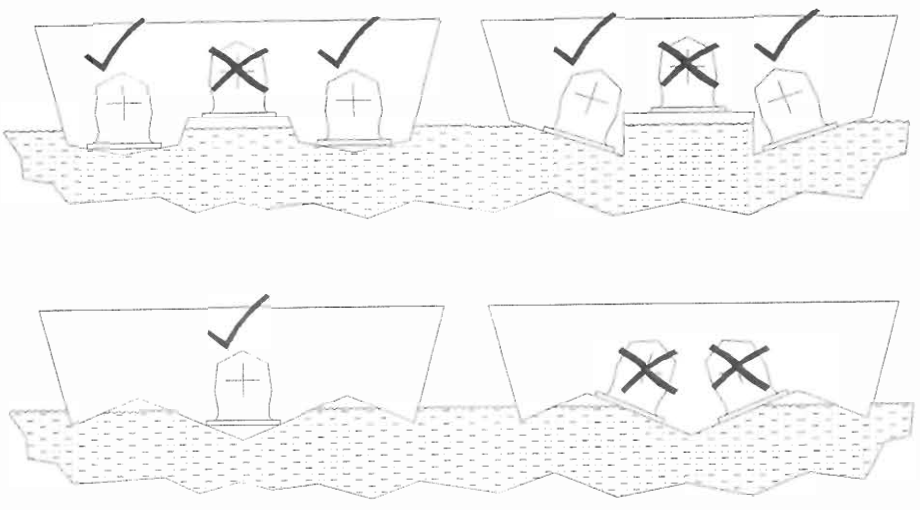

1.3.3.Trim Tabs

Trim tabs cannot be mounted directly alongside the Jet Unit as when moving astern, the reverse jet stream will hit them and reduce reverse thrust.

It is possible to mount trim tabs under the Jet Unit with any control equipment mounted on either side of the Jet Unit. The diagram below serves as a guide to the maximum size of trim tab that may be located under the Jet Unit. Contact **C.W.F Hamilton & Co Ltd** if further details are required.

The Diagram shows the area within which the Trim Tab must lie. From the maximum width "W" at the Transom the area tapers inwards 25° per side until it reaches the same width as the Reverse Duct bottom corners.

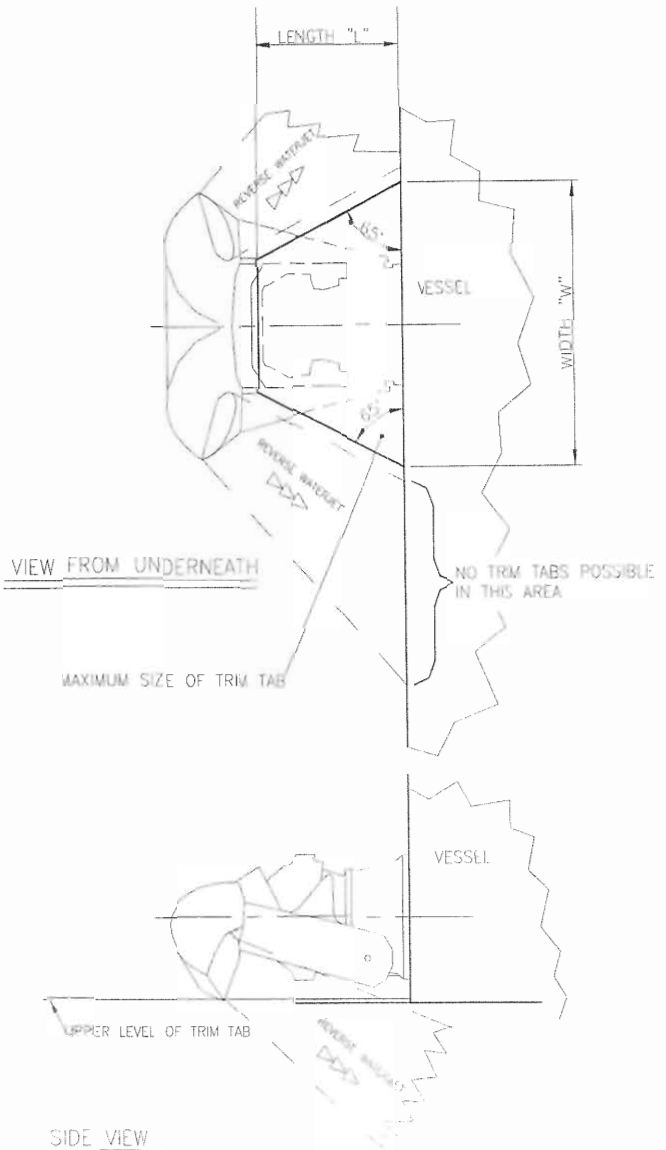

JET	WIDTH "W"	LENGTH "L"
HM-811	2400	1500
HM-721	2130	1330
HM-651	1900	1180
HM-571	1880	1360
HM-521	1730	1250
HM-461	1540	1110
HM-422	1250	800
HJ-391	1250	800
HS-363	1270	950
HJ-362	930	580
HJ-322	1030	740
HJ-321	1030	740
HJ-292	950	640
HJ-291	800	500
HJ-274	950	640
HJ-273	890	570
HS-272	1020	710
HJ-241	850	650
HJ-213	850	550
HJ-212	850	550

1.3.4.Engine Exhausts

Engine exhausts should not be located below the waterline near the Jet Units.

If engine exhausts are located below the waterline near the Jet Units, water containing exhaust gases can be ingested by the Jet Unit when moving astern. This can cause loss of thrust and control of the Jet Unit.

1.4. DRIVELINES

WARNING:

THE JET UNIT THRUST BEARING MUST NOT BE SUBJECTED TO EXCESSIVE RADIAL LOADS CAUSED BY:-
1. ADAPTORS AND BELT PULLEYS OVERHANGING THE JET UNIT COUPLING FLANGE.
2. RIGID DRIVELINES WHICH DO NOT ACCOMMODATE MISALIGNMENT CAUSED BY GEARBOX MOVEMENT.
3. DRIVESHAFT WEIGHT THAT CAN BE SUPPORTED AT THE JET.

1.4.1.Requirements of Driveline

1. The Driveline must accommodate parallel and angular misalignment plus allow axial movement.
2. The Driveline must transmit the torque input to the Jet Unit with an acceptable life expectancy. It does not have to transmit thrust loads as these are absorbed by the Jet Unit
3. Torsional flexibility will be required in the Driveline. A torsional vibration analysis must always be carried out. The resultant torque on the Jet Unit must always be in the same direction. This should be carefully checked at engine idle speed.

1.4.2.Engineering Checks

All driveline component suppliers (including engine and jet suppliers) must be consulted with full driveline details to ensure suitability and compatibility of components.

Checks must include:
1. **Critical speed check for whirling of the Mainshaft:** consult C.W.F. Hamilton & Co. Ltd.
2. **Critical speed check for whirling of the driveshaft:** consult driveline supplier.
3. **Engine to Jet alignment:** consult C.W.F. Hamilton & Co. Ltd.
4. **Torsional Vibration Analysis:** consult engine or torsionally flexible coupling supplier.

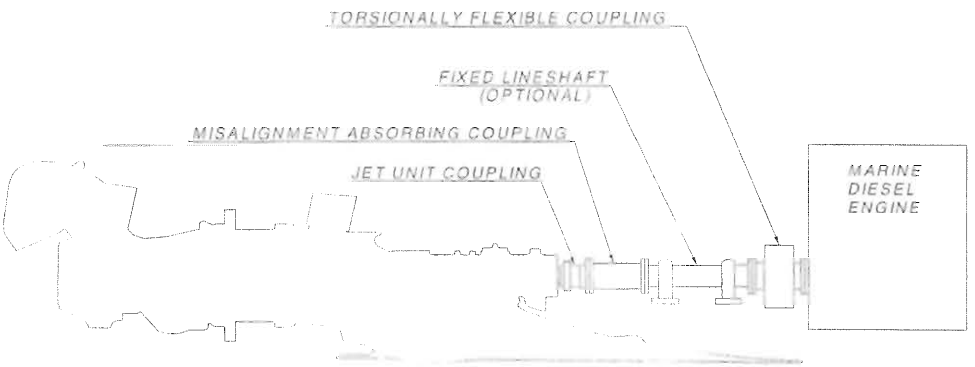

1.4.3. Driveshaft Options

The diagrams below and overleaf show two common driveline components and their arrangements. These diagrams are a guide only. Always contact **C.W.F Hamilton & Co Ltd** before designing the Driveline.

UNIVERSAL DRIVESHAFTS:

These are double universal slip-jointed Driveshafts, also called Cardan shafts. They bolt directly to the Jet Unit Coupling.

Lengths range from approximately 900 mm to 3,000 mm. Lengths are limited by the weight which can be allowed at the Jet Unit Coupling. **Refer to Section 1.4.7. "Critical Speed of Mainshaft" and Section 1.4.2 "Engineering Checks".**

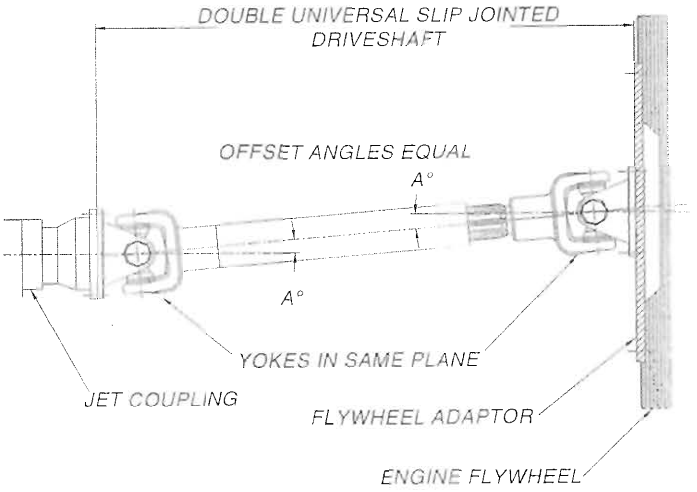

Double Universal Slip Jointed Driveshaft

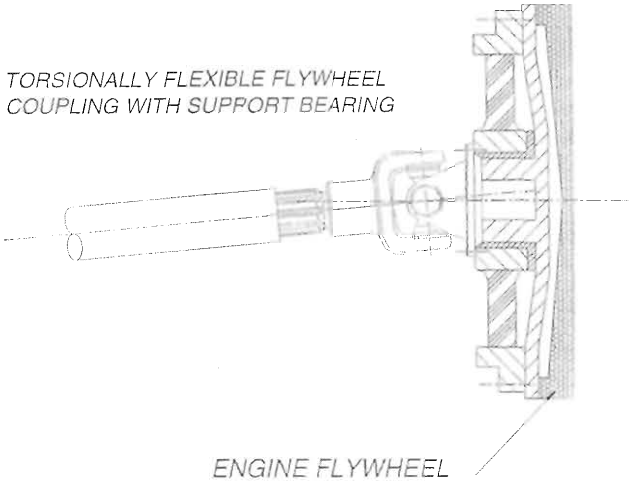

Torsionally Flexible Flywheel Coupling

TORSIONALLY FLEXIBLE COUPLING (TFC)

The torsional vibration analysis will determine how many TFCs are required and where they should be located. At least one TFC should be fitted either:

- Between the engine and the gearbox.
- Immediately between the gearbox and any shafting leading to the Jet Unit.

DOUBLE ELEMENT TORSIONALLY FLEXIBLE COUPLINGS

Examples of such couplings are "Centaflex" and "Megaflex".
Use a double element torsionally flexible driveshaft with support bearings such as the "Centaflex GZ" type illustrated. The engine/gearbox is **located In-line** with the Jet Unit and can be flexibly mounted with this type of coupling.

Length - From approximately 200 mm (8") upwards, but limited by the weight which can be allowed at the Jet Unit coupling. **Refer to Section 1.4.7. "Critical Speed of Mainshaft".**

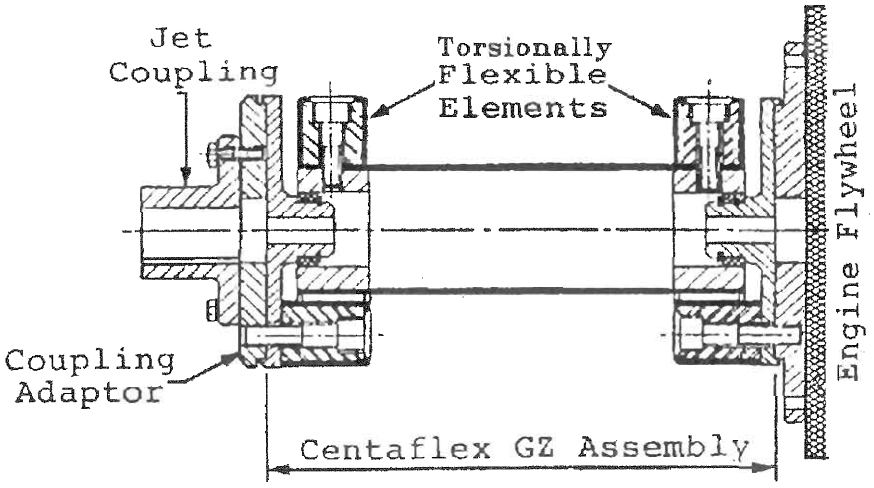

Central Universal Joint Shaft

DOUBLE ELEMENT NON TORSIONALLY FLEXIBLE COUPLINGS

An example of such a Coupling is "Centalink".

GEAR COUPLING:

This Coupling is steel double -jointed coupling which is both flexible to allow for angular offset and also rigid to absorb torsional twisting.

The Coupling is formed by two hubs, which engage into a flanged sleeve with internal straight parallel teeth. Due to the design of the of the teeth curvature, if shaft misalignment occurs, the hub can oscillate in the flanged sleeve.
The curved face teeth couplings are flexible enough to compensate for misalignments and axial movements of coupled shafts. The same type of coupling also allows for greater shaft offset.
Manufacturers recommendations regarding installation and alignment should be followed.

NOTE:

A double jointed coupling is required.

LONG DRIVESHAFTS

Where the distance between the gearbox flange and the Coupling flange exceeds that possible with a MAC, then a fixed Lineshaft supported on pedestal bearings should be used in conjunction with either universal driveshafts or torsionally flexible couplings. Refer to Figure 16: Long Driveshafts.

NOTE:

If a TFC is not required between the gearbox and the Lineshaft, then the Lineshaft can be directly attached to the gearbox flange using normal propeller shafting criteria. The gearbox should be mounted rigidly to avoid misalignment.

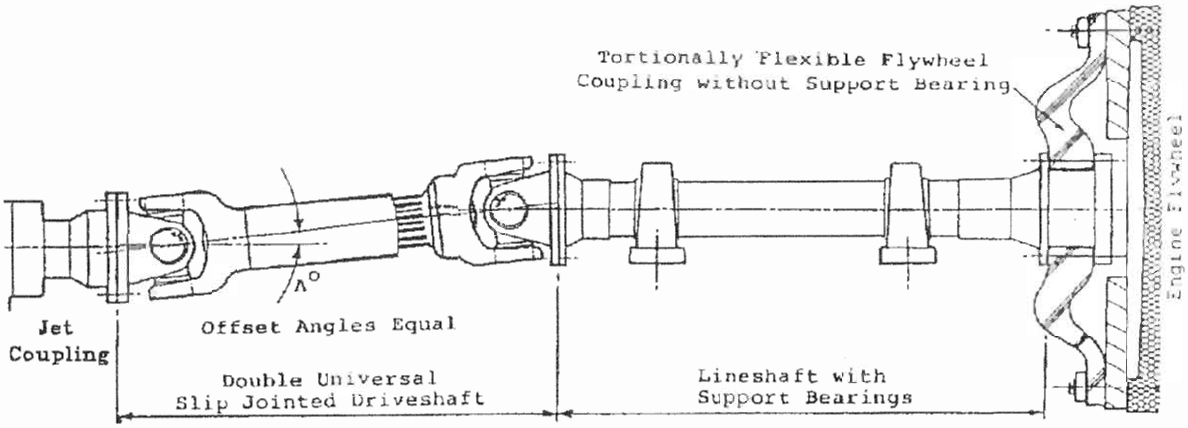

Long Driveshafts

1.4.4.Universal Driveshaft Alignment

NOTE:

1. There are only two allowable configurations for location of centrelines for the Jet Unit and Gearbox. These are the "Z" and "W" configurations shown. If these requirements are not met, then cavitation of the Jet Unit and machinery damage can result because the drive speed to the Jet Unit is not constant.

2. The universal driveshafts must be assembled with the yokes (forks) in the same plane.

3. Correct running length of the shaft is with the shaft extended to half the total spline extension length.

4. The splined end of the driveshaft is heavier and should be installed at the gearbox end of the Driveline.

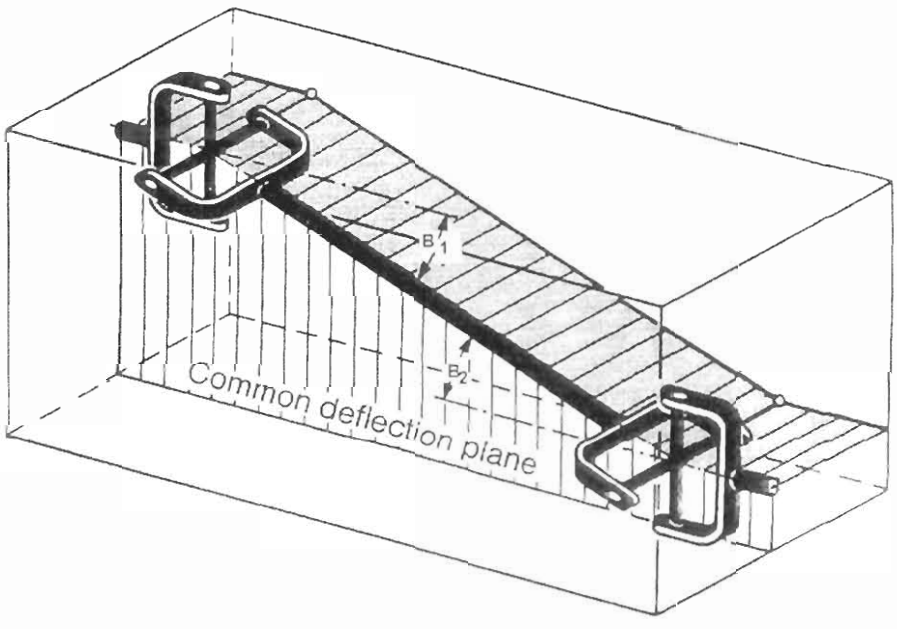

"Z" CONFIGURATION COUPLING (For Constant Velocity $B_1 = B_2$.

Input and Output Shaft are parallel to each other in one plane. $B_1 = B_2$

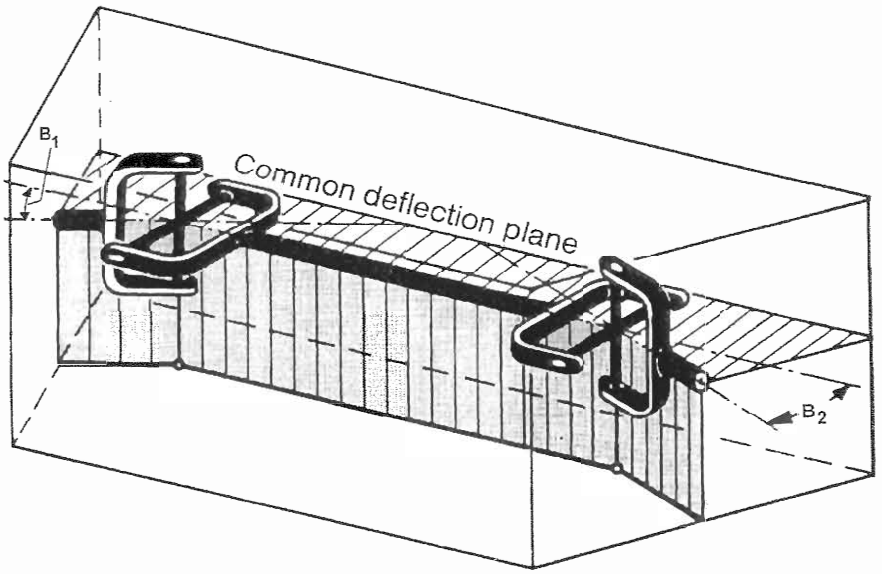

"W" CONFIGURATION COUPLING (For Constant Velocity $B_1 = B_2$.

Input and Output Shaft intersect in one plane. Requirement $B_1 = B_2$

NOTE:

1. **When the TFC couples directly to a universal driveshaft, the TFC must provide a bearing to support the universal driveshaft.**

2. **When the TFC couples directly to a Lineshaft supported on bearings, a support bearing is not required.**

1.4.5. Jet Coupling Flange Details

Please refer to **Drawing HJ-273-02-001 Coupling and V' Belts for HJ-273 Jet,** for all relevant Coupling details.

1.4.6.Moments of Inertia

A Torsional Vibration Analysis must be carried out for the complete drive train including Engine Flexible Coupling, Gearbox, Driveshaft and Jet rotational assembly, especially where a universal driveshaft is used without a torsionally resilient member or gearbox in the driveline. It is the responsibility of the vessel builder to see that this is carried out by either the engine manufacturer or the flexible coupling manufacturer.

The Moment of Inertia Data for the Jet Unit is provided below, to enable a Torsional Vibration Analysis to be carried out.

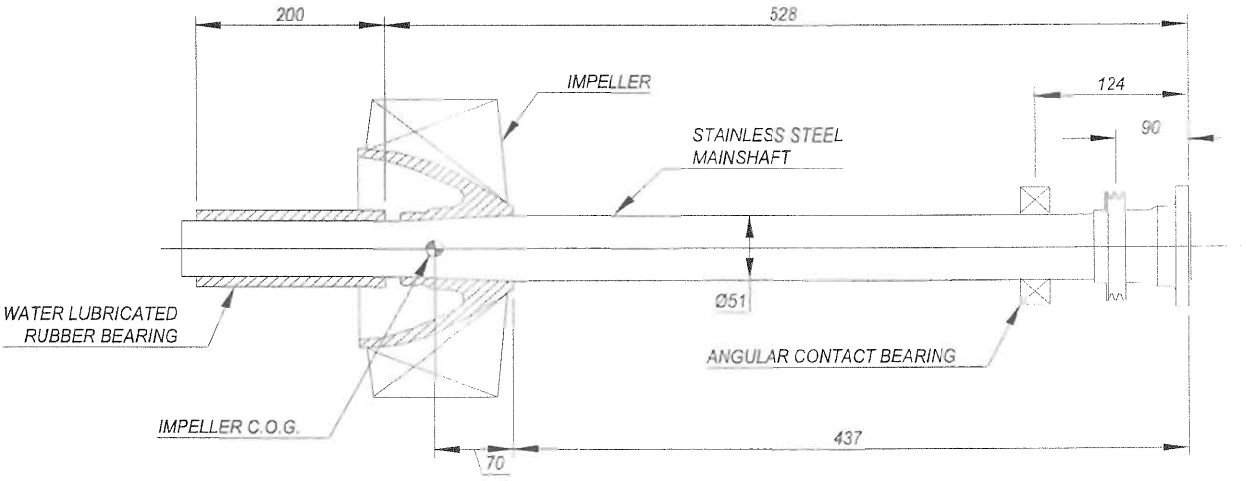

ITEM	TYPE	MASS (kg)	Ip kg.m²
MAINSHAFT	Ø51	8.15	0.0026
IMPELLERS	TYPE 6.5 TO 8.0 (4 BLADE)	9.07	0.056
	TYPE 8.5 TO 11.5 (5 BLADE)	9.5	0.059
	TYPE 10.6 TO 13 (6 BLADE)	9.5	0.059
COUPLINGS	120mm	2.2	0.0027
	1510	2.8	0.0056
	1410	2.6	0.0084

HJ-273 JET MAINSHAFT DIMENSIONS

1.4.7.Critical Speed of Mainshaft

NOTE:

1. In all cases, for the calculation of the "Critical Speed of the Jet Mainshaft" consult C.W.F. Hamilton & Co Ltd.

2. The heavier splined end of the Universal Driveshaft should be located towards the engine.

If a heavy Driveline is used then a transverse vibrational analysis of the Jet Mainshaft should be carried out.

1.5. JET MAINSHAFT ALIGNMENT

(Port & Starboard Jets Only).

Hamilton waterjet Mainshafts are inclined at an angle of 5° to the Intake base. When port and starboard Jets are mounted at the Hull Deadrise angle, the Jet Mainshafts are no longer parallel to the keel line in plan. The following table lists the angle deviation of the Jet Mainshaft when the Jet base is mounted parallel to the keel line.

FOR INTAKE BASE PARALLEL TO KEEL LINE:

B1 = Shaft angle in Plan view.
B2 = Shaft slope in Elevation.

ANGLES (Relative To Keel Line (in degrees) :-

(HULL DEADRISE	B1	B2
0	0	5.0
5	0.4	5.0
10	0.9	4.9
15	1.3	4.8
20	1.7	4.7
25	2.1	4.5
30	2.5	4.3

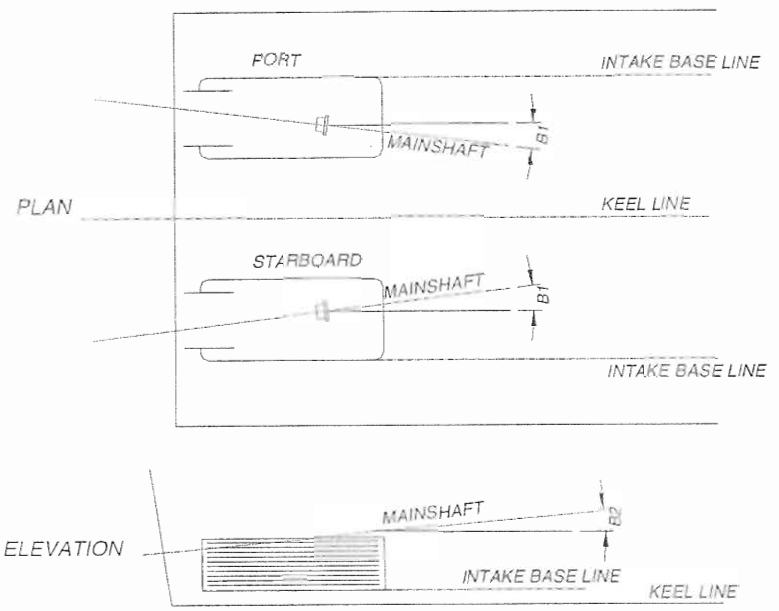

1.6. COOLING WATER OFF TAKE

The following graph of flow rates is for the Jet at zero vessel speed. To determine RPM refer to HP-RPM curves in the Designers Manual or, to calculate the RPM from horse power use the following formula:-

$$RPM = 1000 \times \left[\frac{(\text{horsepower} \times 746)}{\text{Impeller Rating}}\right]^{1/3}$$

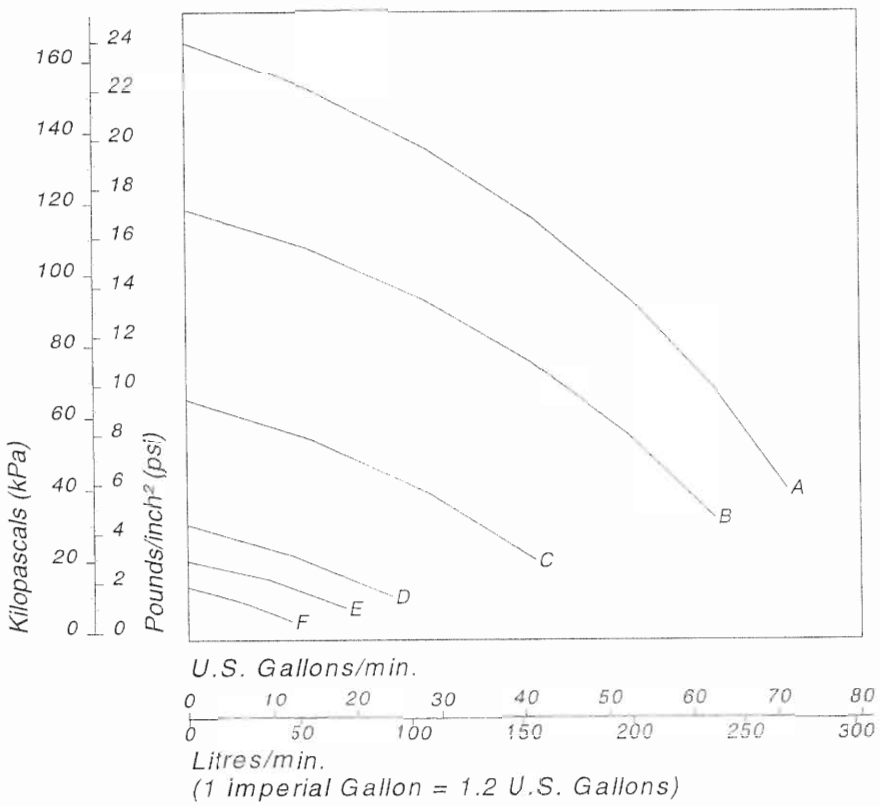

A = 169kW
B = 87kW
C = 28kW
D = 11kW
E = 5.6kW
F = 2.6kW

NOTE:

Pressure increases with vessel speed. Pressures in excess of 30psi are likely at vessel speeds over 30 kts.

1.7. DESCRIPTION OF THE DRY RUN SYSTEM (OPTIONAL)

NOTE:

Hamilton Jet Units are not fitted with the Dry Run Kit as a standard fit. The Dry Run Kit is an optional extra, which can be fitted to the Jet Unit at the customers request. Should the customer require a Dry Run System, it can be purchased at additional cost and should be requested when the Initial Jet Order is placed.

This Dry Run System is a simple solution to the problem of starting a boat engine before putting the vessel in the water. It is particularly useful for Man-Overboard boats and Lifeboats where it is important to ensure that the engine will start before the vessel is in the water.

The Dry Run Kit consists of a specially formulated Bearing, which can be run dry for short periods and run for long periods with water lubrication. The Bearing runs on a specially hardened Mainshaft. A special seal replaces the standard bronze or stainless steel Water Seal. **The standard rubber Marine Bearings are designed to run in a water immersed environment where the water acts as a coolant and lubricant for the Bearing and Waterseal. These cannot be run out of water.**

1.7.1.Installation

The Dry Run Bearing components are a direct replacement for the standard Marine Bearing components; therefore there is no requirement for a special installation procedure for converting a Jet Unit to the Dry Run System. The Dry Run Bearing components can be fitted as shown for the normal Marine Bearing replacement in the Jet Unit Manual.

1.7.2.Corrosion

All the components of the Dry Run Kit are made of high quality corrosion resistant materials. The plastic Bearing will turn slightly blue / green after being immersed in sea water,. This is only a surface discolouration and is not detrimental to the performance of the Dry Run Kit System.

1.7.3.Scope of Use

Because there is no cooling for the Dry Run System Waterseal and Marine Bearing, if a Jet Unit is run without the vessel being immersed in water, the Waterseal and the Marine Bearing will heat up rapidly in the absence of water to act as a coolant.

THE FOLLOWING LIMITS MUST BE ADHERED TO, to ensure good component life.

Maximum Dry Run Time:	**3 minutes.**
Maximum Dry Run Engine Speed:	**1000RPM**
Minimum Time Between Dry Runs:	**1 hour.**

The plastic Dry Run Kit Bearing is a compromise for use in both dry and wet running conditions. The best wet running design solution is the rubber Marine Bearing which cannot be run dry. The plastic Dry Run Kit Bearing will wear out far quicker than a standard rubber Marine Bearing if the dry run system is used constantly in a dirty water environment. When used in silty water, life of the bearing and sleeve will be reduced, depending on the volume of grit in the water. **THIS SYSTEM SHOULD ONLY BE USED IN A CLEAN WATER ENVIRONMENT.**

If extended use in a dirty water environment is expected, then regular monitoring of Marine Bearing wear is required.

1.7.4.Fault Finding

Fault	Cause	Remedy
Bearing Jams up when dry running	Excessive heat buildup May have grit in bearing	Run in water to cool Leave overnight to cool Flush out with clean water
Clanging sound from the Jet	Impeller hitting the Wear Ring due to worn Bearing	Replace worn Bearing and / or Sleeve. Check the Wear Ring and replace if damaged
Excessive scouring of Shaft Sleeve	Running in dirty water and sucking sand or silt into Jet	Be careful not to suck sand or silt into Jet, do not use high RPM in water when starting off

1.7.5.Maintenance

INSPECTION

Inspect every 100 hours, 50 dry starts, or yearly, whichever is the soonest. Remove the Tailpipe and inspect. If the wear on the Sleeve is greater than 0.2mm, replace the Sleeve. Replace the plastic Bearing when replacing the Sleeve.

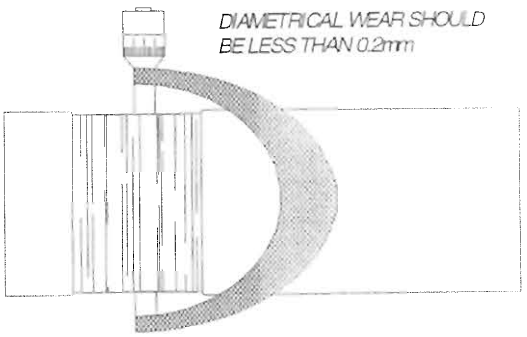

ASSEMBLY NOTES

1. When changing The 'Dry Run Bearing Assembly', dismantle and reassemble the whole assembly (plastic and metal shell) to the Tailpipe in the same manner as removing / replacing a standard rubber Marine Bearing. The plastic part of the Bearing should be fitted so it sits closest to the Impeller. The shell should sit flush with the Tailpipe as shown on the diagram in Section 7 of this Manual.
2. The Bearing Sleeve is fitted to the Mainshaft in the same manner as the Bearing Sleeve for the rubber Marine Bearing (Refer to the Overhaul Section of the Jet Manual).

NOTE:

The Bearing Sleeve is hardened at one end only. Assemble with the larger diameter end (hardened end) nearest to the Impeller.

1.7.6.Parts List

Drawing HJ-273-01-004 refers:

DRY RUN KIT	BEARING	SLEEVE	COUNTERFACE	ROTARY SEAL
110337	106626	106603	61486	61363

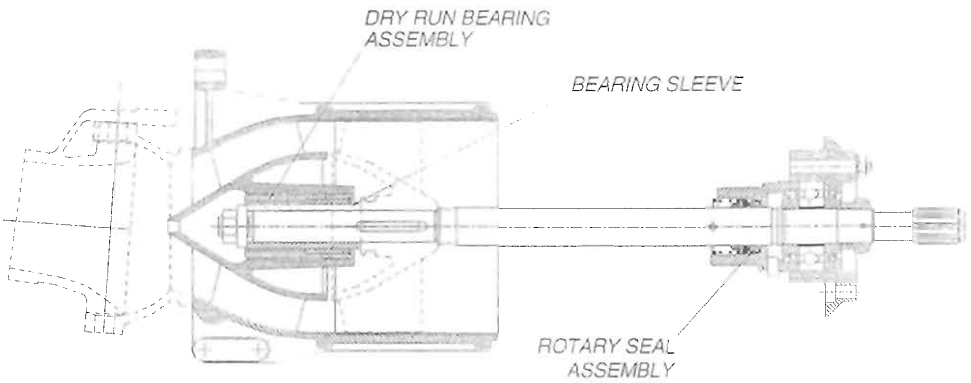

2. Installation

CAUTION:

Prevention of Corrosion

The Jet Unit has been designed to withstand the corrosive effects of operation in salt water through the use of materials that are resistant to salt water corrosion and by the placement of sacrificial anodes in suitable locations.

Vessels using Hamilton Jet Units must be bonded and wired as described in this Section to prevent corrosion occurring due to the presence of stray currents or due to galvanic interactions along the shore power grounding conductor.

2.1. BASIC INSTALLATION METHOD AND DRAWING REFERENCES

FOR G.R.P. OR WOODEN HULLS:
Refer to Installation Drawings: HJ-273-08-001

An aluminium "Intake Block" (Part No. 106238) is supplied with the installation kit for fibre glassing into fibre glass and wooden Hulls. The Intake Block is best fitted into the Hull prior to moulding. After moulding into the Hull the Intake Block is also bolted to the Hull. For fibre glass Hulls, refer to the following Installation Drawings at the rear of the manual.

FOR ALUMINIUM HULLS:
Refer to Installation Drawings: HJ-273-08-002

An "Intake Block" (Part No. 106237) is supplied ready to weld into a prepared opening in the Hull bottom.

It is assumed that the aluminium plating of the Hull is one of the following types 5083, 5086, 6061, 6063, 6101, 6202, 6151, or 6951. If not consult **C.W.F Hamilton & Co Ltd.** The intake block is Lm6 grade aluminium. Weld the Intake Block into the Hull using the weld procedure shown on Drawing 85080. Ensure the contours between the Hull and the Intake Block at front & rear are smooth to within 1mm.

FOR STEEL HULLS:
Installation Drawings supplied on request.

Special installation is required to ensure that the Jet Unit is totally insulated from the Hull.

A Steel "Intake Block" (Part No. 105747Y) is supplied (or can be fabricated by the vessel builder, if desired) to weld into a prepared opening in the Hull bottom. An insulation kit is supplied to totally insulate the Jet Unit from the Hull.

2.2. HULL PREPARATION

CAUTION:

In Multi Jet Unit installations, each Jet Unit is specifically assembled for Port, Starboard or Centre mounting and are matched to their individual Intake Blocks. Care should be taken to ensure that each Jet is fitted onto the correct Intake Block.

2.2.1.Fixing the Intake Block to the Hull

G.R.P. HULLS OR WOODEN HULLS:

Drawings HJ-273-08-001 refers.

If possible tape the Intake Block into the hull mould prior to moulding the hull. For centre-mounted jets and additional smooth surface will have to be taped to the mould in front of the Intake Block to mould over and form a fairing between the vee hull form and flat of Intake Block. For a Wooden hull, or an existing GRP hull, cut a hole in the hull larger than the Intake Block base flange to allow a scarfed joint in GRP between the Intake Block and the hull, as shown on the installation drawing.

After moulding, drill 26 x 9mm diameter holes at the cast dimples in the bottom of the intake block up through the Intake Block flange and hull. Countersink the holes to accept the 8mm countersunk head machine Screw (item [10]). Fit countersunk screw assemblies, items [10], [11], [13] and [15] using RTV Silicon Sealant, [17] provided. Torque load the Nuts [11] to the recommended torque, **refer to Drawing 85113.**

Ensure that the contours between hull and Intake Block, at front and rear, are smooth to within 1 mm.

ALUMINIUM HULLS:

Drawings HJ-273-08-002 refers.

It is assumed that the aluminium plating of the hull is of one of the following types: 5083, 5086, 6061, 6063, 6101, 6202, 6151 or 6951. If not consult **C.W.F. Hamilton & Co Ltd.**

The Intake Block is LM6 grade aluminium. Weld the Intake block into the hull in accordance with the information given in Drawing 85080 included in the Jet Drawings package. Ensure that the contours between Hull and Intake Block, at front and rear, are smooth to within 1 mm. Grind flat where necessary, especially in front of the Intake.

2.2.2. Transom Preparation

An area at 102° to the Jet Intake base has to be prepared as shown on the Hull Preparation Drawing. For metal Hulls cut, position and re-weld the required area if necessary. Cut the hole in the Transom using the cardboard template provided **(Part No. 106403).**

FOR GRP AND WOODEN HULLS:

Drawings HJ-273-08-001 refers.

If the Transom is not close to 102° already an insert can be taped into the hull mould so the required area at 102° can be moulded with the hull. Alternatively, the area to be at 102° can be cut from the Transom and re fibre glassed back at the correct angle. One method to locate the cut-out Transom at the correct angle is to install the Jet Unit, bolt the Transom Plate assembly and Transom cut-out into position on the Jet, and then to fibreglass the cut-out back into the Transom.

FOR METAL HULLS:

Drawings HJ-273-08-002 refers (Aluminium Hulls).

If the Transom is not close to 102° already cut out the required area, reposition at 102° and re-weld back to the Transom with any necessary inserts at sides and top.

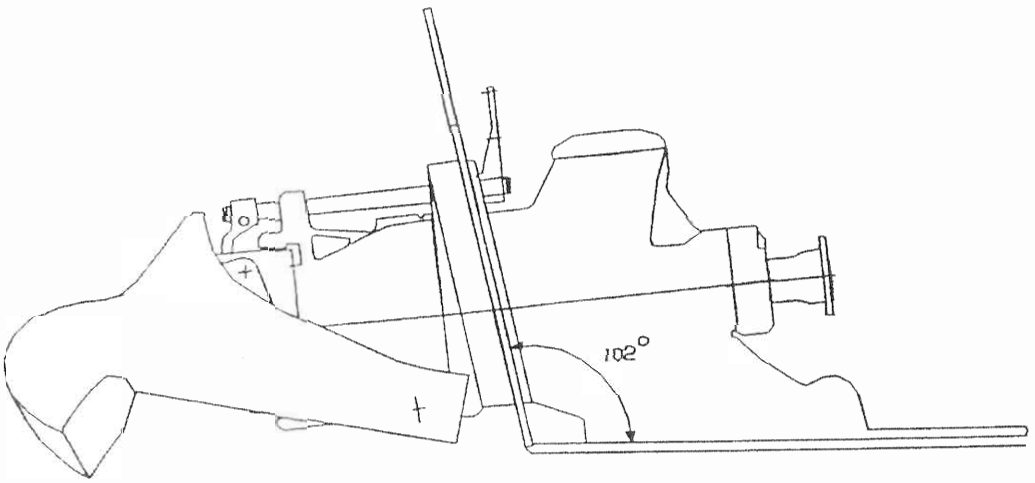

2.3. MOUNTING THE JET UNIT

PREPARATION

After mounting the Intake Mounting Block and making the Transom Hole in the Hull;

1. Remove the Reverse Duct from the Jet Unit. **Refer to Section 8.4.1. Reverse Duct Removal.**
2. Remove the Transom Seal Plate from the Jet Unit. **Refer to Section 8.6. Transom Seal Assembly Overhaul.**
3. Lift the Jet Unit (complete with the Intake Screen) into the Hull and position the Jet Unit so that the Tailpipe passes out through the Transom opening and the Intake Screen fits centrally in the rectangular Intake Block hole.
4. Check that the Unit is correctly located in relation to the Transom and proceed as follows:

2.3.1. Mounting the Jet Unit (Fibre Glass, Wooden and Aluminium Hull)

Drawings HJ-273-08-001 and HJ-273-08-002 refer.

1. Lift the Jet Unit off and move it away from the Intake Block.
2. Screw in and tighten the Studs provided into the tapped holes in the intake block. A convenient method of fitting the studs is to tighten two nuts together on the top of the stud so that a spanner can be engaged on the nuts to tighten the studs into the base. Use of thread locking fluid such as Loctite 262 is recommended. Ensure threads are clean before applying Loctite.
3. Liberally apply neutral cure R.T.V. Silicone Sealant (supplied) to the top of the Intake Block, underside of the Jet Unit Flange and to the bolt heads.
4. Carefully position the Jet Unit Flange on the Intake Base and bolt down as shown in the appropriate installation drawing.
5. Torque the 18 x M10 Nuts as indicated in recommended torque's **Section 6.6. "Threaded Fasteners".**
6. Remove excess sealant from inside and outside the Jet Unit.

2.3.2. Mounting the Jet Unit (Steel Hull)

Drawings supplied on request.

1. Lift the Jet Unit off and move it away from the Intake Block.
2. Clean and apply Loctite 262 to the threads, screw in and tighten Studs provided into the tapped holes in the Intake Block.
3. Torque the 18 x M10 Nuts as indicated in recommended torque's **Section 6.6. "Threaded Fasteners".**
4. Drill out the 18 holes in the jet intake base flange to 16.0 dia to accept the Insulating Bushes.
5. Liberally apply neutral cure R.T.V. silicone sealant (supplied) to the top of the Intake Block, underside of the Jet Flange and to the Studs heads.
6. Place the Gasket over the Studs and onto the Intake Base.
7. Install the Jet Unit centrally in the Intake Block hole and fit the Insulating Bushes, Flat Washers, Spring Washers and Nut as shown on the appropriate Installation Drawing.
8. Torque load the 18 x M10 Nuts. **Section 6.6. "Threaded Fasteners" and Drawing 85113 refers.**
9. Remove excess sealant from the inside and outside of the Jet Unit.

2.3.3. Assembly of the Transom Seal (Fibreglass, Wooden and Aluminium Hulls)

1. Hold the two pieces of the Transom Seal Plate against the Transom and centralise them in relation to the Intake.
2. Using a 9.5mm dia. drill bit. Drill through the holes to just dimple the Transom for correct hole location.
3. Slide the Transom Seal Assembly back off the Tailpipe and proceed as follows :
4. Drill 20 holes 9.5 mm dia. through the Transom at the dimpled holes.
5. Liberally apply neutral cure R.T.V. silicone sealant (supplied) to the Transom Plate contact area on the Hull, the joint face of the Transom Plate and Bolt heads.
6. Fit the Transom Seal Assembly into place against the Transom.
7. Fit Bolts, Washers and Nuts. to secure the Transom Plate as per the appropriate installation drawing. With Through Bolt Systems, install with bolt heads to the outside of the vessel.
8. Torque the 20 M8 Transom Seal Securing Bolts as indicated in **Section 6.6. "Threaded Fasteners"** and remove excess sealant.
9. Fit Transom Seal Clamp over the body of the Jet Unit and Transom Seal. Fit bolt, nut, washer and tighten.
10. Fit the Reverse Duct as shown in **Section 8.4.6. "Reverse Duct: Refit to Jet Unit".**
11. Fit Reverse Cylinder and HSRX Assembly.(refer to Controls Manual supplied with this Jet Unit).

2.3.4. Assembly of the Transom Seal (Steel Hulls)

1. Hold the two pieces of the Transom Seal Plate against the Transom and centralise them in relation to the Intake.
2. Using a 9.5mm dia. drill bit. Drill through the holes to just dimple the Transom for correct hole location.
3. Slide the Transom Seal Assembly back off the Tailpipe and proceed as follows :
4. Drill 20 holes 9.5mm dia. through the Transom at the dimpled holes. The Transom Seal Plate must be totally insulated from the Hull by a Rubber Gasket, Insulating Bushes and Fibre Washers fitted to the Transom Plate Mounting Bolts.
5. Drill out the 20 Transom Seal Plate holes to 11.5mm dia. to accept the Insulating Bushes. Ensure that the Insulating Gasket is placed next to the Transom.
6. Liberally apply neutral cure R.T.V. silicone sealant (supplied) to the Transom Plate contact area on the Hull, the joint face of the Transom Plate and Bolt heads.
7. Fit the Transom Seal Assembly into place against the Transom.
8. Fit bolts, washers and nuts, to secure the Transom Plate as shown in the Installation Drawing, fit Insulating Gasket, Bushes and Washers as indicated for Steel Hulls. With Through Bolt Systems, install with bolt heads to the outside of the vessel.
9. Torque the 20 x M8 Transom Seal Securing Nuts as indicated in **Section 6.6. "Threaded Fasteners"** and remove excess sealant.
10. Fit the Transom Seal Clamp over the body of the Jet Unit and Transom Seal. Fit bolt, nut, washer and tighten the Transom Seal Clamp.
11. Fit the Reverse Duct in accordance with **Section 8.4.6. "Reverse Duct: Refit to Jet Unit".**
12. Fit the Reverse Cylinder Assembly in accordance with **Section 8.4.5."Reverse Cylinder: Refit to Jet Unit".**

2.4. REVERSE DUCT FITTING

Drawing HJ-273-07-001 refers

The Reverse Duct should have been removed prior to the installation of the Jet Unit through the Transom hole.

The Reverse Duct may now be refitted to the Jet Unit in accordance with instructions at **Section 8.4.6.** of this Manual.

2.5. REVERSE CYLINDER FITTING

Drawing HJ-273-07-001 refers

The Reverse Cylinder may now be refitted to the Jet Unit in accordance with instructions at **Section 8.4.5. "Reverse Cylinder – Refit to Jet Unit"** of this Manual.

2.6. ENGINE INSTALLATION

The engine(s) should be located in a position that will give the vessel the most suitable fore and aft trim for the proposed vessel speed. For semi-planing and moderate planing speed vessel, the engine should be positioned well forward towards amidships for best trim and speed. For very high speed vessel, the engine should be positioned aft, close to the jet unit, to obtain best trim and speed. Follow the recommendations of the vessel designer in this regard or consult C.W.F. Hamilton & Co. Ltd.

2.6.1. Mounting the Engine

Mount the engine via mounting feet fixed to the engine bearers. The feet and bearers do not have to withstand the propulsion thrust load which is transmitted from the jet directly to the hull. Flexible engine mounts will reduce vibration and noise but these must be used in conjunction with a driveshaft system which does not cause a radial or side load at the jet coupling as the engine moves. **Refer to Section 1.5. "Jet Mainshaft Alignment" and Section 1.4. "Drivelines" for recommended driveshaft and engine installation angles.**

2.6.2. Engine Cooling

CAUTION:

If a gearbox or clutch are fitted to the engine a conventional hull water pick-up and engine raw water pump must be used.

CAUTION:

Ensure that the water pick up is not directly ahead of the Jet Unit intake, but well to the side to avoid turbulent water flow into the Jet Unit.

There is a $1^1/_4$" BSP outboard water off take which provides water at approximately 1 kN per sq.m. (1.5 psi) at 600 RPM and up to 275Nm per sq.m (40 psi) at full throttle - 225 Kw (300 Hp) refer to **Section 1.6. "Cooling Water Offtake".** The water may be fed directly to the engine without the need for a raw water pump, provided that;

a) The pressure from the water off take at idle is sufficient to cool the engine.
b) The engine can withstand the full pressure from the Jet offtake.

To be sure of correct flow for engine cooling a conventional water pick up and the engine raw water pump should be used.

The Jet Unit water offtake can be used for a deck cleaning hose but **the pressure is not high enough for a fire hose.**

The Jet Unit is supplied with the water off take plugged. A $1^1/_4$BSP to $1^1/_4$" (32mm) Hose Tail (supplied loose) can be fitted in place of the Plug.

2.6.3.Exhaust Systems

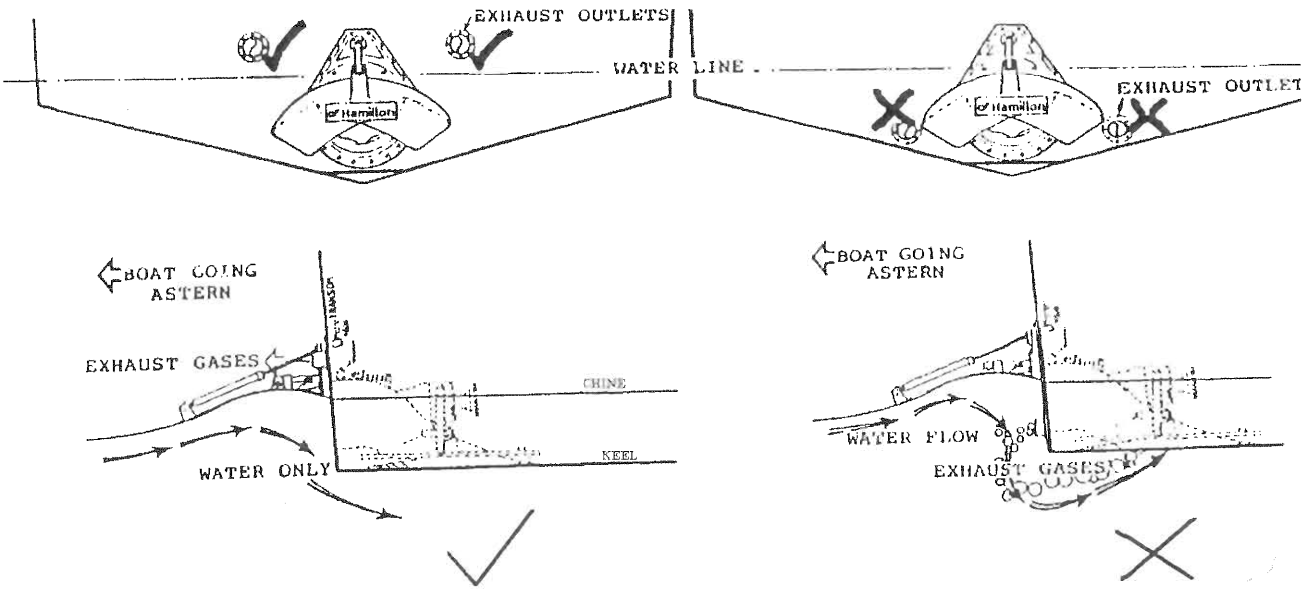

The exhaust system can be any conventional system approved by the engine manufacturer, except that for the efficient operation of the Jet Unit in reverse, exhaust outlets are best sited above the waterline.

3. Commissioning

WARNING:

ENSURE THAT THE VESSEL IS SECURELY MOORED AS DURING COMMISSIONING. THE JET UNITS MAY PRODUCE LARGE THRUST FORCES.

DO NOT PROCEED IF ANY OF THE CONTROL SYSTEM FAULT ALARMS ARE STILL ACTIVATED.

3.1. PRE-LAUNCH CHECKS

1. Check that all Inspection Covers on all Jet Units are securely attached.

2. **STEEL HULLS ONLY:**
   Check that the insulation between the Jet Unit and the Hull of the vessel measures NOT LESS THAN 1000 Ohms. Refer to Section 7.3.2. "Checking the Insulation" for further details.

3.2. POST LAUNCH CHECKS

Perform the following procedures before the engines are started.

1. Check that there are no water leaks:
   a) At the Transom Seal.
   b) At the Intake Base.
   c) From under the Bearing Housing (Water Seal leak).

2. Check that the waterline is up to at least the Mainshaft centreline so the Jet Unit will prime (pump water properly) when the engine is started.
3. Ensure that the vessel is securely moored fore and aft and located in deep clean water.

3.3. SPEED AND HANDLING TRIALS

NOTE:
It is preferable for a Hamilton distributor to be present to observe, record and verify results.

3.3.1. Before Leaving the Mooring

1. Engine systems should be adjusted and ready for trial.
2. Ensure that Jet Unit Intake Screens and insides are clear of any debris which could have been disturbed during trial running alongside the mooring.

3.3.2.Propulsion System Check

CAUTION:

If a problem is detected, return immediately to the mooring at reduced power. Do not operate the Jet Unit until the fault has been repaired. Refer to Section 5. Faultfinding.

1. Check the surface temperature of the Bearing Housing periodically during the trials, with the palm of your hand. Due to the friction caused by the seals, the housing is likely to be hot.
2. The temperature is satisfactory when a hand can be held on the surface for about 2 seconds. A faulty Bearing will be heard and felt as a vibration through the Bearing Housing.
3. A faulty Bearing is likely to cause significant heat generation which will be quite noticeable and could even discolour the paint on the Bearing Housing.
4. Record accurate maximum speed and engine revolutions timed over a measured course.
5. Note the actual readings given on vessel's instrumentation for future calibration of figures. At maximum speed, Jet Unit rotational speed should be verified using a hand held tachometer at the Jet Unit Coupling.
6. Record vessel speed at varying engine revolutions if possible.
7. Make and record observations on such things as vessel trim and loading.

3.4. POST TRIALS INSPECTION

1. Refer to **Section 6.3. "Servicing Intervals"** for any after trials maintenance that may be required.
2. Ensure that all important information recorded during trials is stored for later reference.
3. Check for water leaks around the Jet Unit especially at the Transom Seal and under the Bearing Housing (Water Seal leaks).
4. **STEEL HULLS ONLY:**

   Check that the insulation between the Jet Unit and the Hull of the vessel measures approximately 80 to 100 Ohms. Refer to Section 7.3.2. "Checking the Insulation", for further details.

4. Operation

CAUTION

Never stop the Engine(s), or disengage the drive to the Jet Unit, when approaching a mooring or at any time when control of the vessel may be required.

4.1. STARTING UP

NOTE:

With HSRX Reverse Control, the Reverse Duct will lower itself to a full reverse position when the engine is not running.
At start up, the Reverse Duct will be in full reverse position, but will move to correspond with Control Lever position as soon as the JHPU (Hydraulic Pump Unit) is running.

1. Before starting engine(s), the following checks should be carried out:
   a) The vessel is securely tied up or well clear of other objects.
   b) The Helm is centred and the Reverse Controls are at Zero Speed.
   c) Clutches and Gearboxes, if fitted, are in neutral position.
2. After starting engine(s).

- Adjust the Helm and Reverse Levers, to control vessel movement.

4.2. STEERING

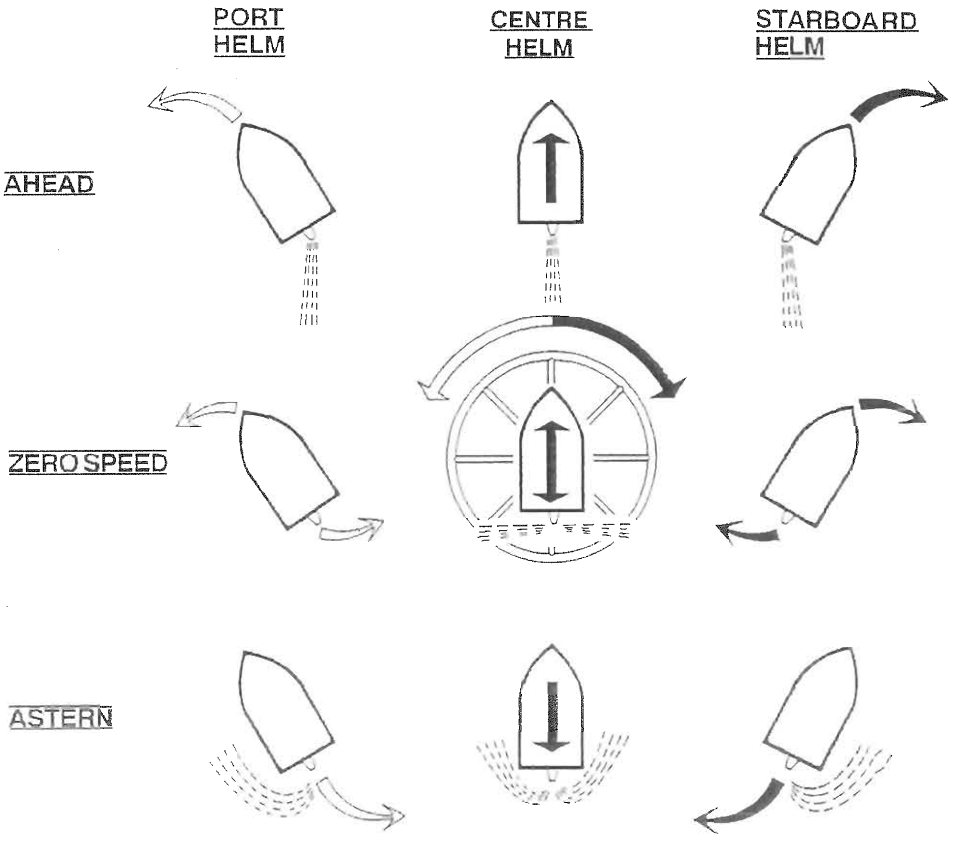

The Steering Nozzle deflects the jet of water to port or starboard causing the vessel to steer to port or starboard respectively.

The following points should be remembered when operating a Jet Vessel:-

1. If the engine is stopped there is no jet of water to deflect and so the vessel cannot be steered or stopped.
2. Never stop the engine or disengage the drive to the Jet when approaching a mooring or at any time when steering will be required.
3. The more the throttle is opened the greater the steering effect - i.e. the sharper the turn.
4. Steering is available at "Zero Speed" as well as all ahead and astern speeds - a feature which gives the Hamilton Jet unrivalled manoeuvrability.

When moving ahead at **"Zero Speed",** or astern, **the bow of the vessel will always turn the way the steering wheel is turned**, i.e. move the steering to port, the bow of the vessel will move to port and vice versa.

This means that **going astern** the vessel has **the opposite steering to a motor car**, a feature which can be used to advantage when manoeuvring.

The following steering systems are suitable for this application:

1. A manual hydraulic steering system which gives approximately 1.3 turns of the helm from full lock to full lock is recommended. (A greater number of turns will reduce sensitivity of steering during low speed manoeuvring).

2. A high quality rotary, or rack and pinion, cable system is an alternative but for single jets only - the system must not allow more than 1.5 turns of the helm from full lock to full lock.

The Steering System is balanced so that power assisted controls are not necessary even for multiple Jet Units.

4.2.1.Total Hydraulic Failure

EMERGENCY STEERING CONTROL:

In the case of a complete hydraulic failure the Jet(s) may be steered by manually moving the Jet Tiller(s). Open the By-Pass Valve (or disconnect the hydraulic hoses at the cylinders if there is no valve). The Nozzle position is indicated by the gauge at the Helm. Steering may only be possible at low RPM unless an Emergency Tiller Extension is used (not included in C.W.F Hamilton & Co Ltd standard supply).

EMERGENCY MANUAL REVERSE DUCT CONTROL

This is the manual raising of Reverse Duct and is only necessary if the following have failed:

I. The Hydraulic Pump.
II. The Main and any Emergency Control Systems.

To Raise the Reverse Duct:

a) Attach a rope to the Reverse Duct.
b) Take the weight of the Reverse Duct.
c) Lift the Reverse Duct and tie off the rope so that the Duct is raised out of the jet stream.

This will enable the vessel to proceed at speed and return to base to have the fault checked and rectified.

4.3. MANOEUVERING AND DOCKING

TO MANOEUVER:

a) **With Multiple Jets.** Shut down the engine driving the Jet without reverse and manoeuvre using the other Jet(s).
b) **With a Single Jet.** The vessel can be partially manoeuvred by raising the Reverse Duct with a rope and lowering it under its own weight. The engine must be kept at idle RPM.

4.3.1.Low Speed Manoeuvering and Docking

The vessel is best manoeuvred as follows:-

a) Move the Reverse Control Lever to the "Zero Speed" position.
b) Set the throttle to 1/3 open - approximately 1,200 R.P.M. (In strong tide or wind conditions increase the throttle opening to obtain greater response as required to suit the conditions).
c) A slight movement either way from the "Zero Speed" position will be sufficient to move the vessel ahead or astern until the manoeuvre is complete.
d) Steering will be very responsive at this throttle opening. Full steering control is available at all ahead/astern control lever positions and there is no change of steering "sense" at any time.
e) Manoeuvre at a fixed throttle opening, working the steering with one hand and the Ahead/Astern Control Lever with the other hand.

NOTE:

1. **DO NOT WORK THE THROTTLES - Leave as set. With TWIN JETS manoeuvring is best carried out using the Helm with one hand and both Reverse Levers with the other hand. ONE AHEAD and ONE ASTERN is NOT AS EFFECTIVE.**

2. **USE ONLY LOW ENGINE RPM - high RPM will give faster response but makes control more difficult.**

3. **If the bow is rotating to starboard, port lock must be used to stop the rotation (or vice versa) then the Helm centred to hold the heading.**

4. **If the vessel is moving ahead then the Reverse Lever(s) must be moved astern to bring the vessel to rest (or vice versa) and then Zero Speed selected to hold position.**

4.3.2. Moving Sideways.

WITH TWIN JETS:

Use the following procedure to move the vessel sideways away from the jetty. Initially both controls are at "ZERO SPEED" and the vessel is stationary.

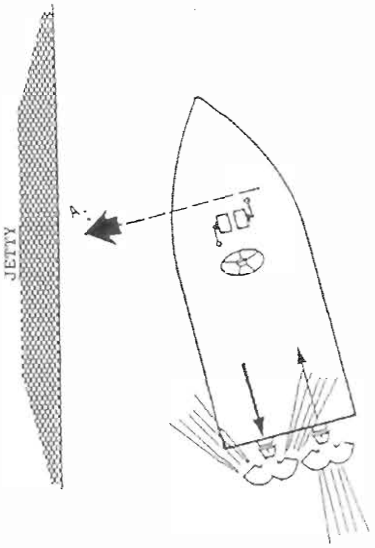

MOVING TO PORT

A

1. Set both engine RPMs to just above idle with slightly higher RPM on the port side.

2. Set steering to ahead.

3. Move the port reverse lever to full astern and the starboard lever to full ahead.

B

4. As the bow begins to swing to Port, turn the helm to starboard to keep the vessel parallel to the jetty.
The vessel will now move sideways to Port.

5. Adjust the port engine rpm to prevent fore and aft movement. (Higher RPM moves vessel aft). This may also be achieved by bringing the starboard reverse control back towards the Zero Speed position.

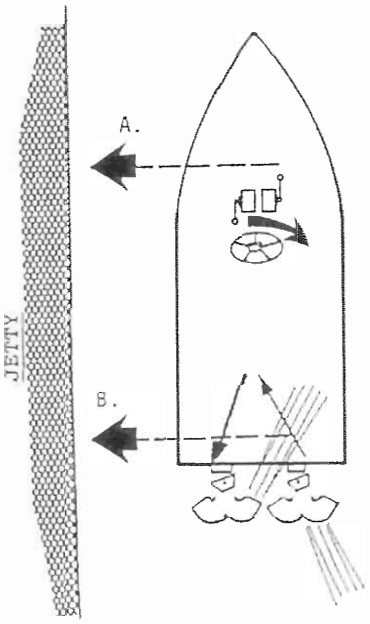

MOVING TO STARBOARD

Instructions 1 to 4 are the same but for Port read Starboard and vice versa. When the Vessel is safely clear move both controls back to zero speed and centre the helm. Then move off in the required direction.

DOCKING.

Use the above procedure when approaching or moving away from a jetty or another vessel. Note, if the vessel is moving sideways too fast the controls should be set back to zero speed and the Helm returned to centre. Alternatively set the controls for sideways movement in the opposite direction until the vessel stops moving sideways. Note that the required control setting will vary according to wind and tide conditions.

WITH TRIPLE JETS:

Using all three Jets to move sideways gives best results.

1. Set Steering to dead ahead, all three reverse ducts to the "Zero Speed" position and RPM on all Engines to the same value. (The rpm required for manoeuvring will depend on the prevailing sea conditions, higher RPM will improve response).
2. For sideways motion to port, set the port Jet full astern and the starboard Jet full ahead (this is reversed for sideways motion to starboard).
3. Use the centre Jet Reverse Duct to control fore and aft movement (Duct approximately 80% reversed).
4. Use the Helm to control turning (rotation) moments, i.e. for sideways motion to port turn the Helm to starboard to balance the turning moment of the port and starboard Jets.

This method of sideways manoeuvring should result in 33% more side thrust than if only two Jets were used. Once set up, only the centre Jet Reverse Control and the Helm need to be used for controlling the sideways movement.

MOVING TO STARBOARD

Follow instructions 1 to 4 above, but for "Port" read "Starboard" and vice versa.

TO STOP SIDEWAYS MOVEMENT

Set the Helm to dead ahead, Throttle RPM to idle and Reverse to Zero Speed before the vessel reaches the required position. Alternatively set Controls to start sideways movement in the opposite direction until vessel stops sideways movement then set the Controls to :- dead ahead Steering; idle Throttle and zero speed Reverse.

4.4. CRUISING

CAUTION:

Running at speed with a partially blocked Inlet Grille or debris on the Impeller will result in cavitation damage to the Jet Unit.

Care must be taken to prevent cavitation damage to the Jet Units, as described below:

1. Running at speed with a partially blocked Inlet Grill or debris on the Impeller will result in cavitation damage to the Jet Unit. Therefore, before accelerating to full speed, all Jet Units should be cleared by BACKFLUSHING. **Refer to Section 4.9. Blockages**. This should be done on every trip as soon as clear water is reached.

2. Acceleration should be carried out gradually. Full power cannot be used at low vessel speeds such as when operating on one engine only. If there is any blockage of the Jet Unit, the engine will run at a higher than normal RPM and the vessel will accelerate slowly, and best speed will be reduced. If such symptoms are noticed, immediately slow the vessel and clear the blockage. **Section 4.9. Blockages refers.**

3. In conditions of severe weather or overload, the engine speed should be reduced accordingly.

4.5. "AHEAD" / "ZERO SPEED" / "ASTERN" CONTROLS

WARNING:

SELECTING 'ASTERN' (CRASH STOP) WHILE THE VESSEL MOVING AHEAD AT HIGH SPEED CAN PRODUCE A VERY RAPID DECELERATION.

NEW OPERATORS SHOULD USE THE "CRASH STOP" FEATURE VERY CAREFULLY.

DO NOT USE FULL HELM CONTROL UNTIL THE VESSEL HAS SLOWED.

SELECT ZERO SPEED AND REDUCE THROTTLE AS SOON AS THE VESSEL HAS SLOWED.

"Astern" and "Zero Speed" are achieved by redirecting the jetstream. If the Reverse Duct is lowered fully, all of the jetstream is redirected back under the vessel giving "Full Astern Thrust". If the Reverse Duct is lowered partially the jetstream is split giving some ahead and some astern thrust. At a certain Reverse Duct position the ahead and astern thrusts will be equal so the vessel will not move ahead or astern regardless of the throttle opening. **This position is given the technical term "Zero Speed".** (This term should not be confused with the neutral position of a gearbox when the driveline stops rotating).

When operating the Hamilton Reverse Control, the Jet Unit is always rotating regardless of the position of the Reverse Duct. Any intermediate position between ahead and astern can be selected to give infinitely variable speeds when manoeuvring.

"Crash" or "Emergency Stop"

This Procedure Should Only Be Used In An Emergency.

CAUTION:

If in lightweight planing craft, which is moving forward at speed, the "Astern" or "Zero Speed" positions are selected with the throttle left open, the resultant "Braking Effect" is very severe - even more so than full braking with a motor car.

For normal operation to "Brake" the vessel's forward motion :-

a) Close the throttle.
b) Select "Zero Speed" or "Astern".
c) Open the throttle, gently at first until the desired braking is achieved.
d) Close the throttle as soon as the vessel has slowed to a standstill.
e) Do not use full steering until the vessel has slowed.

4.6. SHALLOW WATER OPERATION

CAUTION:

Do not run the Jet if the vessel has run aground. Damage may occur to Impellers.

It is important to avoid pumping stones, sand, etc, through the Jet Unit as this will blunt and wear the Impeller. The following diagrams illustrate good and bad practice:

a) At high planing speeds shallow water operation is not a problem until the vessel is nearly grounded.

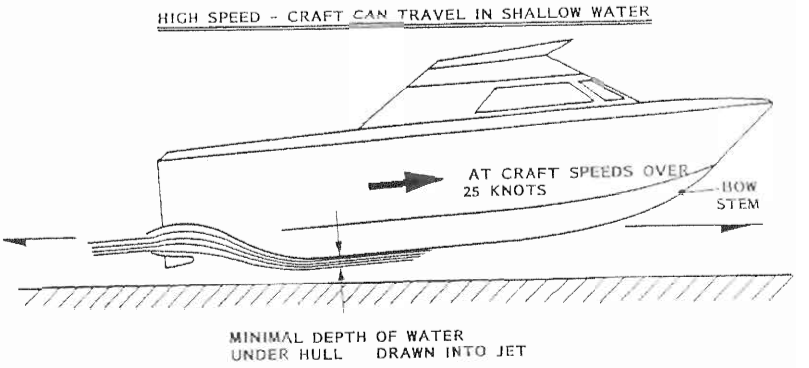

b) At slow displacement speeds avoid using high RPM in shallow water.

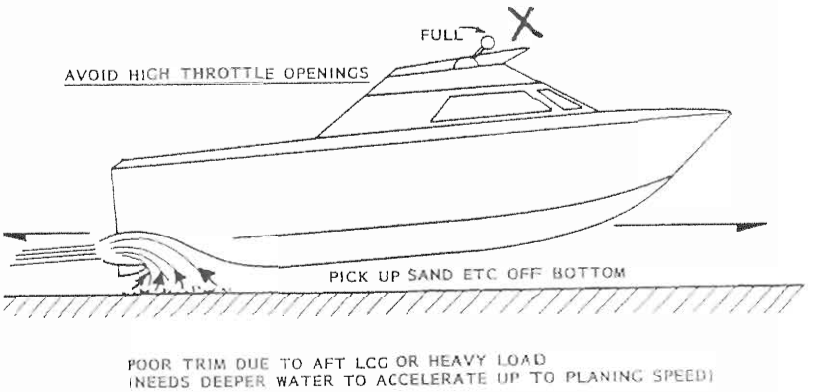

c) If it is not possible to pick a deep water area to start off and stop in, then "idle" over the shallow area into deep water before accelerating up to planing speed. If any debris has been picked up in the intake screen, momentarily stopping the engine should allow the debris to drop away from the screen.

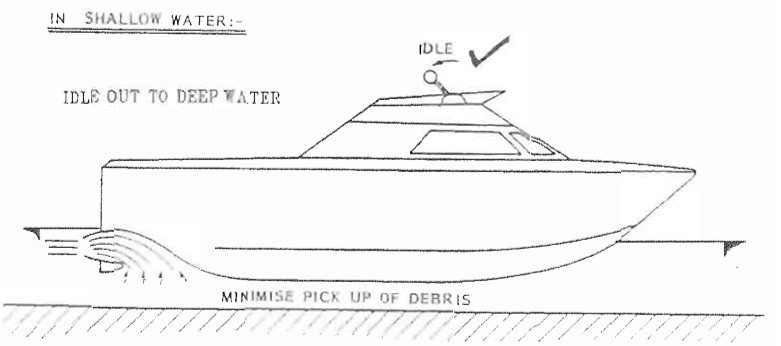

4.7. ACCELERATION TO HIGH SPEED.

If leaving an area of shallows, or with debris in the water, ensure Jets are clear of debris before accelerating to high speed. **Refer to Section 4.9.3. Clearing Blockages.**

If there is any debris in the Jet the engine will run at higher than normal RPM and the vessel accelerate only slowly, perhaps not reaching full (planing) speed. **Refer to Section 4.9.2 Detecting Blockages.**

Every day, prior to commencing operations, the Inspection Cover should be removed and any debris removed from around the Impeller or Intake Screen.
Refer to Section 6.4. Item 1.

CAUTION:

Ensure the water level is below the Inspection Cover level before removing the Inspection Cover.

CAUTION:

Running at speed with a partially blocked Inlet Grill or debris on the Impeller will result in cavitation damage to the Jet Unit.

4.8. AERATED WATER

It is possible that some Hulls may, under certain conditions, feed aerated water into the intake of the Jet Units.

When operating in areas where the water may be excessively aerated. (eg. fast flowing rapids or surf) the following points should be noted:

1. There may be a loss in thrust due to the Unit pumping a significant amount of air instead of water.
2. The Impeller may unload suddenly causing the engine RPM to fluctuate wildly.

When these symptoms occur, reduce engine RPM until the Jet Unit maintains a steady RPM and thrust.

4.9. BLOCKAGES (Debris In The Jet Unit)

4.9.1. Avoiding Blockages

Pieces of debris, water weed or sticks, etc will not normally block or harm the Jet Unit. However, it is good practice to steer around such debris where possible as any debris caught in the Intake Screen, Impeller or Tailpipe Stator Vanes can affect the Jet Unit's performance.

4.9.2. Detecting Blockages

In debris laden waters it may be necessary to clear the Intake Screens and Impellers before each run. In many cases the debris is picked up while the Jet Unit is moored, so it is advisable to clear the Intake Screen in open or clear waters.

Blockages of the Jet Unit are usually noticed by the following symptoms:

a) Engine unloading (RPM increases).
b) Lack of Jet thrust (vessel speed drops).
c) Abnormal noise and vibration from the Jet Unit.

4.9.3. Clearing Blockages

WARNING:

EXTREME CARE IS REQUIRED WHENEVER THE INSPECTION COVER IS REMOVED, AS WATER MAY ENTER THE VESSEL THROUGH THE OPENING. NEVER LEAVE THE INSPECTION COVER REMOVED WITHOUT CONSTANT MONITORING OF THE WATER LEVEL.

The following methods can be used to clear a blocked Jet Unit:

a) Slow or stop the engine driving the blocked Jet Unit. The blockage will often clear itself. This operation works best when the Vessel is still moving forward at speed.
b) BACKFLUSH the blocked Jet Unit (only possible if a reversible gearbox is used) as below:
   I. Stop or slow the Vessel to displacement speed.
   II. Move the Reverse Duct to the ZERO SPEED position.
   III. Reverse the rotation direction of the blocked Jet Unit by engaging reverse gear and opening the throttle slightly. This should clear the blockage. If this fails to work, repeat several times.
c) Remove the Inspection Cover on the Intake and manually clear the obstruction. **Refer to Section 4.9.4 Using the Inspection Cover.**

NOTE:

1. **Check that the static water level will be safely below the Intake Inspection Cover lip.**

2. **If the static water level is too high, Ballast should be placed on the bow to raise the stern high enough to allow the Intake Inspection Cover to be removed.**

3. **Alternatively, an optional extra Overflow Preventer can be fitted to the inspection point to allow inspection of the Intake Housing at higher water levels.**

4.9.4. Using the Inspection Cover

WARNING:

EXTREME CARE IS REQUIRED WHENEVER THE INSPECTION COVER IS REMOVED, AS WATER MAY ENTER THE VESSEL THROUGH THE OPENING. NEVER LEAVE THE INSPECTION COVER REMOVED WITHOUT CONSTANT MONITORING OF THE WATER LEVEL.

CAUTION:

Before removing the Inspection Cover:-

a) Stop all engines.
b) Check that the static water level will be below the Inspection Cover lip.
c) If the static water level is too high, ballast should be placed on the bow to raise the stern high enough to allow the Inspection Cover to be removed.
d) Alternatively, an optional extra Overflow Preventer can be fitted to the inspection point to allow inspection of the Intake Housing at higher water levels.

4.9.5. Hatch Extension

Drawing HJ-273-10-004 refers.

The Hatch Extension is an optional extra for use with Jet Units where the water level is above the normal level of the Inspection Cover.

a) It is attached to the top of the Intake Casing in place of the Inspection Cover. The Inspection Cover is then fitted to the top of the Hatch Extension.
b) It provides an increase of approximately 140 mm in allowable water level height.

For fitting and removal of the Hatch Extension, **refer to Section 8.3. "Hatch Extension"**.

4.10.OPERATING WITH AN ENGINE & JET UNIT OUT OF SERVICE

If the vessel is operated with an engine and Jet Unit out of service, it is possible for the Jet Unit Mainshaft to rotate due to water flowing through the Jet Unit. This is undesirable as it can lead to damage of the gearbox.

USE OF SHAFT BRAKE (IF FITTED) TO STOP MAINSHAFT ROTATION

The Shaft Brake should be fitted to the output shaft of the Gearbox. Apply the Shaft Brake to stop the Jet Unit Mainshaft rotation in Jet Units not in service.

USE OF ENGINE TO STOP MAINSHAFT ROTATION

If a Shaft Brake is not fitted, the Jet Unit Mainshaft can be prevented from rotating by engaging the Gearbox of the Engine which is out of service.

NOTE:

When using this method, it is possible for the Jet Unit to rotate the Engine. If this occurs, disengage the Gearbox and let the Jet Unit Mainshaft rotate.

5. Fault Finding

HOW TO USE THIS FAULTFINDING TABLE:

a) Look for a symptom similar to what you have noticed.
b) Try each solution until the fault is found and rectified.
c) Use the "REFER" column for more information on each solution.
d) Try the easiest (first) solution first.

No.	SYMPTOM		
	POSSIBLE CAUSE	***SOLUTION***	***REFER:***
1	**Engine RPM increases suddenly**		
	There is some blockage of the Jet Unit	Remove the blockage	*4.9*
	Faulty engine tachometer	Repair tachometer	-
2	**Engine RPM increases suddenly, noise from Jet Unit and aerated Waterjet**		
	Intake Screen blocked	Remove the blockage	*4.9.3*
	rope jammed on Intake Screen and wrapped around Mainshaft	Remove the blockage	*4.9.3*
	object jammed on Stators and / or Impeller	Remove the blockage	*4.9.3*
3	**Engine RPM increases gradually**		
	worn or blunt Impellers	Inspect and repair Impeller	*6.4.11 a*
	excessive Impeller tip clearance	Inspect and repair Impeller	*8.7.5*
4	**Engine RPM decreases**		
	There is some problem with the engine	Investigate engine operation	-
5	**Thrust reduces (vessel speed drops)**		
	There is some blockage of the Jet Unit	Remove the blockage	*4.9*
6	**Poor Reverse Thrust**		
	Reverse Duct not travelling fully down so that all of jetstream enters Reverse Duct.	Could be caused by the cable ball not positioned properly on the tube grooves or the Detent Plate not properly adjusted.	Refer to Controls Manual
	Reverse jetstream hitting Hull or Hull Extension such as Trim Plate	Adjust Reverse Duct and / or Trim Plate.	1.2.3
	Boat has insufficient immersion at transom and air being sucked from rear into Jet Intake	Boat should be ballasted to ensure correct immersion at Transom.	1.2. / 2.6
	Effect of engine exhaust on Jet Reverse	Re-position Engine Exhausts.	1.2.4
7	**Vibration suddenly increases from Jet Unit**		
	debris stuck on Impeller	Remove the blockage	*4.9*
8	**Vibration gradually increases from Jet Unit**		
	worn Driveshaft joints	Inspect and repair the driveshaft as per manufacturer's recommendations	-
	worn Water Bearing	Inspect and repair Water Bearing	*6.4.11 c) /8.7.5.*
9	**Loud high pitched rattling whine comes from Jet Unit**		
	Faulty Thrust Bearing	Inspect and repair Thrust Bearing	*8.1*
10	**Bad vibrations, gradually increasing**		
	Worn Water Bearing or Bearing water drain hole blocked.	Inspect and repair Water Bearing	*6.4.1 c /8.7.5.*
	Worn driveshaft universal joints.	Inspect and repair the driveshaft as per manufacturer's recommendations	-
11	**Water leaks from under Bearing Housing**		
	Faulty Water Seal	Inspect and repair Water Seal	*8.1.*

6. Maintenance : General

This Jet Unit has been designed to require the absolute minimum of maintenance. However, it is recommended that the Jet Unit be regularly examined for the wear of the Bearings, Seals and Bushes, etc.

HYDRAULIC EQUIPMENT

When servicing Hydraulic Equipment, use the following general rules to ensure effective and trouble free servicing:

1. Minimise the loss of oil to surrounding areas by liberal use of oil absorbent cloth.
2. If disconnecting hydraulic connections to components which are not going to be serviced immediately, plug the connection to prevent loss of oil and entry of foreign particles.

6.1. PRESERVATION: (Pre- Installation)

The following storage requirements must be provided to ensure that no damage or deterioration occurs to the Jet Unit :

1. Temperature must be between 10º C and 40º C and above the "dew point" (i.e. no condensation is allowed to form).
2. The Mainshaft should be fully supported by a Shaft Support Tool to prevent deformation of the Water Bearing.
3. All exposed steel parts (except for stainless steel parts) should be protected from corrosion. As a corrosion preventative treatment, coat all exposed steel parts with a thin layer of rust preventative oil.
4. To protect hydraulic fittings, either:
   a) Coat with oil impregnated corrosion protection tape.
   OR
   b) Spray with a recognised corrosion protection treatment.

6.2. PRESERVATION: (Post Installation)

CAUTION:

The Jet Unit cannot be run out of the water, unless fitted with a Dry Run Kit.

When the vessel is not operational for an extended period, the following procedures must be followed to prevent marine growth and corrosion problems.

1. Actively prevent marine growth through the following procedures:

   a) Paint the inside and outside of the Jet Unit with antifouling compound
   b) Keep light away from the Jet Unit. Moor the vessel in deep water rather than shallow water.
   c) Place an opaque bag over the Steering Deflector to prevent light entering the inside of the Jet Unit. In shallow water a similar cover should be tied over the Intake Screen.
   d) If moored for longer periods the Jet Unit can be pumped dry using compressed air. A sealing plug can be ordered from C.W.F Hamilton & Co Ltd. This is fitted into the Nozzle and air is introduced to push water out of the Jet Unit.

2. Turn the Mainshaft by 180º once per week. This can be done manually if the engine is not started.

CAUTION:
Before moving any Controls, ensure that any marine growth is removed from the Steering and Reverse Linkage Rods. This will prevent damage to the seals that these Control Rods pass through.

Perform the following procedures at an interval ranging from 1 week to 1 month, depending on operational conditions.

1. Run the Jet Unit for a short time.

2. Stroke the Reverse Duct and Steering Deflector fully six times. Leave the Reverse Duct in the raised position and the Steering Pushrod fully retracted.

6.3. SERVICING INTERVALS

Please note the following points:

1. Vessel usage is assumed to be 2000 operational hours per year. Adjust your schedule as necessary.
2. The frequency of the following service items may be varied to suit actual operating conditions. Refer to the appropriate Section for details.

Jet Unit examination every 5000 hours **(refer to Section 6.4 Item 11).**

SERVICING INTERVALS (JET)

ITEM	WHAT TO DO	REFER TO	FIRST 5 HOURS	1 DAY	100 HOURS	500 HOURS	1 MONTH	3 MONTHS	1000 HOURS	FIRST 2000 HOURS	5000 HOURS
INTERNAL WATER PATH	CLEAR BLOCKAGES	4.9		•							
WATER SEAL	CHECK FOR LEAKS	6.4/4		•		•					
THRUST BEARING	LUBRICATE	6.4/2					•				
DRIVESHAFT UNIVERSALS	LUBRICATE		**As recommended by the manufacturer**								
EXTERNAL ANODES	CHECK CONDITION	6.4/5						•			
STEERING LINKAGES	CHECK INTEGRITY	6.4/7		•							
STEERING CRANK	LUBRICATE	6.4/9			•						
STEERING PUSH ROD	LUBRICATE	6.4/8			•						
SCREEN RAKE AND BEARINGS	CHECK / LUBRICATE	6.4/6			•						
COMPLETE JET UNIT	EXAMINE / REPAIR	6.4/11								•	•
(STEEL HULLS ONLY)	INSULATION CHECK	7.3.2					•				

6.3.1. Daily "Pre Use" Servicing Checks

The following areas should be checked on a daily basis if the Boat is in regular use.

DAILY SERVICING CHECKS (JET)

AREA	OPERATION
Intake Screen **Impeller** **Stator Blades**	**Ensure that the water level is below Hatch or Overflow Preventer before opening the Inspection Cover.** Check via the Inspection Hatch that they are clear of debris.
Reverse Hydraulic Cylinders and Oil Lines.	Check for oil leaks, especially if oil has been added to the system.
Position Indicator Senders (Transmitters)	Check for loose electrical connections and linkages if fitted on the System.
Thrust Bearing Housing	Check for signs of water leaking from under the Thrust Bearing Housing. (Leaking Water Seal). If Water Seal is leaking it should be replaced as soon as possible otherwise water could contaminate the Thrust Bearing causing corrosion and failure of the Thrust Bearings.

6.4. JET UNIT SERVICING DETAILS

WARNING:

EXTREME CARE IS REQUIRED WHENEVER THE INSPECTION COVER IS REMOVED, AS WATER MAY ENTER THE VESSEL THROUGH THIS OPENING.
NEVER LEAVE THE INSPECTION COVER REMOVED WITHOUT CONSTANT MONITORING OF THE WATER LEVEL.

Item No	Item	Operation
1	Intake Flow Path	**Check for obstructions inside Intake daily.** Remove Inspection Cover and check around the Impeller and Intake Screen for obstructions and debris. **Refer to Section 4.9 Blockages (Debris in the Jet Unit).**
2	Thrust Bearing	Grease with a good quality lithium-based ball bearing grease every month in operation. Do not over grease. Normal operating temperature is 50-55°C (120 - 130° F) but the Bearing can operate up to 120°F satisfactorily, noting that most of the heat is generated by the Seals. A faulty Bearing will be indicated by noise and vibration rather than temperature.
3	Water Bearing	This is a water lubricated Bearing and requires no attention. **Do not run the Jet Unit out of water as this will damage the Bearing and Waterseal.**
4	Water Seal	**Check for water leaks daily.** Visually check for water dripping from under the Bearing Housing. If water is found, the Water Seal is defective and should be replaced.
5	External Anodes	**Check the condition of the Anodes every 3 months.** a) Inspect all external Anodes . b) Replace any Anode which is less than half its original size. c) Ensure all fasteners are correctly tightened when fitting new Anodes.
6	Screen Rake and Bearings	**Check at regular intervals for free operation.** Stiffness or binding may be caused by debris caught in the screen or seized Bearings. Grease Bearings periodically with water repellant grease.
7	Steering Linkages	**Check integrity daily where possible.** Check that all linkages between the Steering Crank and the Steering Deflector are secure and have a small amount of free play.
8	Steering Push Rod	**Grease every 100 hrs.** Grease Bearings periodically with water repellant grease.
9	Steering Crank	**Grease every 100 hrs.** Grease periodically with water repellent grease.

Item No	Item	Operation
10	**Driveshaft**	**Lubricate every 500 hrs or to suit the manufacturers recommendations.** Follow the manufacturers recommendations for type of Driveshaft used.
11	**Jet Unit**	**Carry out internal examination of the Jet Unit after the first 2000 hrs operation and thereafter every 5000 hrs.** This examination should be carried out with the vessel out of the water. The following checks should be carried out:- a) **Impeller Blades - Check Clearance** Remove the Main Inspection Cover. Using Feeler Gauges, check the clearance between the tips of the Impeller Blades and the Wear Ring at each side of the Impeller not top and bottom). Maximum recommended worn clearance is 1.0 mm (0.040 inches) per side. b) **Impeller .-.Check for Wear and Damage** Look for signs of corrosion and erosion damage on all surfaces of the Impeller. Check the Impeller leading and trailing edges for damage. c) **Water Bearing - Inspect** Inspect the Water Bearing for scoring or localised wear. Replace if excessively worn. To check for wear, push the Mainshaft hard from side to side. Check total sideways movement at Impeller tips. Maximum recommended worn movement is 0.6 mm ().024. ins). This indicates the amount of wear in the Rubber Bearing and Shaft Sleeve. These items are to be removed in accordance with **Section 8. "Overhaul"** of this Manual. d) **Steering Linkages - Disconnect** These items are to be removed in accordance with **Section 8. "Overhaul"** of the Controls Manual. e) **Tailpipe, Nozzle & Steering Deflector - Removal** These items are to be removed in accordance with **Section 8. "Overhaul"** of this Manual. f) **Jet Unit Paintwork**

CAUTION:

ANTI FOULANT PAINTS:

o not use copper- based anti-foulant paints. Tin based anti-foulant paints are suitable, or any paint suitable for an aluminium hull. Leave all stainless steel parts polished and unpainted.

ANTI-SEIZE COMPOUNDS:

Do not use graphite based anti-seize compounds - these will cause corrosion.

Item No	Item	Operation
11 (cont'd)	**Jet Unit** (Cont'd)	f) **Jet Unit Paintwork (cont'd)** The main body of the unit is constructed from silicon-aluminium alloy (LM6) which is resistant to corrosion from salt water. The castings are finished in a polyurethane paint. Periodic cleaning down, wire-brushing and repainting may be necessary depending on water conditions prevailing, and extent of use. When the vessel is on the slip, preferably annually, the complete Jet Unit should be inspected internally and externally for faults, corrosion, or breakage's. Clean down and repaint the castings where necessary. g) **Refit Components.** Refit components in accordance with the Overhaul Section of this Manual. Follow the recommendations on **Drawing 85018 Recommendations, Fasteners, Lubricants and Oil**, for thread tightening torques, joint lubrication, thread and joint locking, Bearing Housing lubricants and hydraulic fluids. h) **Insulation Checks (Steel Hull Only).** Carry out Insulation Checks as shown on **Drawing 63974**, on a monthly basis, , also refer to **Section 7.3. "Steel Hulls and Carbon Fibre Reinforced GRP Hulls"**.

If excessive wear or damage has been found, then undertake appropriate overhaul as described **in Section 8. *Overhaul*.** Schedule the next maintenance period to suit the conditions found during this inspection, using the following guidelines:

- Decrease the time between each maintenance interval the if amount of dirt and sand in the water increases.
- Increase the time between each maintenance interval if amount of dirt and sand in water decreases.
- Decrease interval if excessive wear was found in the Jet Unit internal inspection (Item 11 above).
- Increase interval if minimal wear was found at the Jet Unit internal inspection (Item 11 above).

6.5. TOOLS

6.5.1.Standard Recommended Tools

The following tools are required for normal maintenance activities:

1. Torque Wrench. ¾"sq/dr.
2. Torque Wrench. ½" sq/dr.
3. Ratchet, Torque Bar And Short Extension ½" sq/dr.
4. Sockets A/F ½" sq/dr, 13 mm, 19 mm, 24 mm.
5. Spanners A/F. 1 x 9 mm, 2 x 17 mm, 1 x 24 mm.
6. Allen Keys 1 x 6 mm and 1 x 8 mm.
7. Pliers Long Nose.
8. Screw Driver Large, Flat Blade.
9. Mallet, Rubber.

6.5.2.Special Tools

The following Tools are included as part ot the Tool Kit (Part No 105794) for the HJ-273 Jet Unit:

1. Coupling Puller.
2. Bolt Puller.
3. Reaction Arm - Coupling.
4. Bolts M8 x 55 Long Zinc Plated (2).
5. Nuts M8 Zinc Plated (2).
6. Socket 36 AF x ¾" sq/dr.
7. Puller Impeller.

6.6. THREADED FASTENERS

Drawing 85113. "Recommendations for Fastener Locking, Torques & Thread Lubrication".

CAUTION:

Tightening Torques: **Ensure that all threaded fasteners are tightened to the correct torque as described in Drawing 85113 or the relevant assembly drawings.**

TIGHTENING TORQUES FOR THREADED FASTENERS

a) The tightening torques for standard fasteners are given on the drawing above and at paragraph 2, below.
b) The tightening torques for special fasteners are shown on the relevant drawings, and also at paragraph 1, below.
c) Ensure that recommended tightening torques are always used.

1. **Special Fasteners -HJ-273 Jet.**

Item	Torque	
Impeller Nut	230 Nm	170 lbs/ft
Coupling Nut	230 Nm	170 lbs/ft
Cotter (taper) Pins	40 Nm	30 lbs/ft
Reverse Duct Pivot Pins	400 Nm	295 lbs/ft

2. **Standard Fasteners.**

Thread Size	Torque	
Grade 316 Stainless Steel		
M6	5 Nm	4 lbs/ft
M8	12 Nm	9 lbs/ft
M10	24 Nm	18 lbs/ft
M12	40 Nm	30 lbs/ft
M16	60 Nm	45 lbs/ft
M20	120 Nm	90 lbs/ft
SAF 2205 Stainless Steel Studs		
M12	54 Nm	40 lbs/ft
M16	130 Nm	95 lbs/ft
M20	260 Nm	190 lbs/ft
M24	450 Nm	330 lbs/ft

THREAD LOCKING AGENTS

Most fasteners require thread locking agents to prevent loosening.
a) Most applications are described on the drawing above.
b) Special applications will be shown on the relevant Assembly Drawing.

6.7. RECOMMENDED LUBRICANTS

Recommended Oils and lubricants required are specified on **Drawing 85018** contained in the Drawings package supplied with this Manual.
Do not use brake fluid or heavier viscosity oils.

ANTI-SEIZE COMPOUNDS:

Do not use graphite based anti-seize compounds - these will cause a corrosion problem.

7. Precautions Against Corrosion

7.1. GENERAL

CAUTION:

Prevention of Corrosion

The Jet Unit has been designed to withstand the corrosive effects of operation in salt water through the use of materials that are resistant to salt water corrosion and by the placement of sacrificial anodes in suitable locations.

Vessels using Hamilton Jet Units must be bonded and wired as described in this Section to prevent corrosion occurring due to the presence of stray currents or due to galvanic interactions along the shore power grounding conductor.

7.1.1.Electrical Wiring System

The guidance of the local inspecting authority rules should be sought, but in general note the following for:

D.C. SYSTEMS

Every part of the DC system should use **TWO** insulated "normally conducting" wires, a positive and a negative. The negative must not run through the frame of any unit, through the Hull of the boat, or through the bonding system. **DO NOT USE AN EARTH RETURN SYSTEM.**

It is recommended that engine starter motors or other DC motors should be the two wire type with an insulated negative terminal rather than having the casing of the starter connected to the battery negative. This is to ensure starting currents do not pass through the earth bonding system.

In smaller vessels, it is common to use negative ground engine systems in which the starter motor, starter solenoid, and alternator are single pole devices using the engine block as the local return conductor. **IN THIS SITUATION, IT IS IMPORTANT TO CONNECT THE ENGINE BLOCK TO THE BATTERY NEGATIVE WITH A HEAVY BATTERY CABLE.**

In installations with two engines and two battery banks with cross-connect starting capability, there must be two heavy conductors between the engines. Local standards if appropriate should be complied with.

A.C. SYSTEMS

For a vessel with both AC and DC circuits it is essential for safety reasons that the AC system has a separate earth wire.

Dock potentials can be as positive as +350mV relative to a silver / silver chloride reference electrode. If a vessel with bonded aluminium Jets is connected to such a dock potential through the separate earth wire, without the protection of an **isolation transformer** or a **galvanic isolator**, the corrosion rate of the aluminium would increase to a value far greater than the normal sea water corrosion rate. This would occur regardless of whether the aluminium was protected by anodes or not.

USING AN ISOLATION TRANSFORMER

If using AC shore supply, the recommended method of preventing potentially serious galvanic or stray current corrosion is to install an Isolation Transformer on board at the incoming line.

When an Isolating Transformer is used, there must be no connection between the shore supply earth and the vessels earth bonding system. The primary winding shield is earthed to shore while the secondary winding should be grounded on board the Vessel. Only one side of the secondary winding is grounded on the secondary side of the Transformer and the Vessel's grounding circuit is tied in at this point. There must be no DC electrical connection between the shore supply and the on board AC circuit.

USING A GALVANIC ISOLATOR

CAUTION:

An isolation transformer or a galvanic isolator must be correctly fitted to the vessel electrical system if the vessel is to be connected to an external AC shore supply.

Alternatively with AC shore supply, a galvanic isolator can be installed on the AC earth wire just after the shore power inlet. This isolator isolates the vessel from low voltage D.C. galvanic currents, while allowing any short circuit to be safely conducted back to shore.

Isolators with capacitors are to be preferred over isolators with diodes only. The isolator should have sufficient fault capacity to allow circuit breakers to trip under fault conditions.

A correctly wired polarization transformer in conjunction with a galvanic isolator is acceptable for connecting to an AC shore power system.

7.1.2.Earth Bonding System

In aluminium and most GRP hulls, the Jet Unit, Hull (if aluminium), all metal objects, electrical equipment casings and Hull anodes should be connected with a low resistance bonding system (separate from normally current conducting 2 wire electric system).

The bonding strip and connecting wires should be aluminium or **insulated** copper of at least 14.5 sq.mm. cross section area (e.g. 5mm diameter.) to give very low (e.g. 0.01ohm) electrical resistance. A copper bonding strip, if used, should not be directly connected to the Jet Unit as galvanic corrosion may occur.

The bonding wire or strip which runs fore and aft down the Hull, should be kept clear of bilge water where possible.

The main function of the bonding system is to provide a path for stray currents to battery negative.

An exception exists for Steel Hulls and GRP hulls whose reinforcement is carbon fibre; the Jet Unit must be totally insulated from the Hull and machinery thus relying totally on its own Anodes for protection.

When a bonding system is used, it is essential that cathodic protection is provided. This cathodic protection can be in the form of ***Sacrificial Anodes*** or an ***Impressed Current System***.

To minimise corrosion from stray current emanating from within the vessel, all power sources (battery and battery charger negatives, AC generator and the ship side of the shore supply earth) should be connected to the earth bonding system at a single common earth point. This will hold these circuits at a common voltage. Any stray currents will then have a direct path back to the battery negative or the AC source.

Alternatively this connection to the battery negative can be deleted PROVIDED that the following is carried out:

1. There is a two wire normally current conducting electrical system which is isolated from the Hull, Jet Unit and Engine,

and

2. There is an effective leakage monitoring system, such as the "Test Light" system, which is used regularly and the results are recorded.

Without the bonding system to battery negative connection, stray current corrosion is possible and it is important to check for leakage:-

a) For every item of electrical equipment in operation.
b) When there is any alteration to the electrical system of the boat.
c) When any electrical connection is made to shore.

7.1.3. Corrosion Monitor

It is recommended that a corrosion monitor be fitted.

a) The corrosion monitor should be a high impedance device. There must be no possibility of an electrical connection between the Jet Units and the ships batteries.
b) If the Jet Units are isolated from the hull, corrosion monitoring of each Jet Unit external wetted surface and internal Intake Duct should be carried out.
c) If the Jet Units are electrically connected to the hull, corrosion monitoring of the hull only and each Jet Unit internal Intake Duct should be carried out.

7.1.4. Earth Plate Connections For Electronic Transmitting Equipment

Radios, radar's and other transmitting equipment **should NOT use the Jet Unit for an earth plate** but must have a separate earth plate.

Be guided by the installation instructions for the radio; radar, etc. equipment, but in general these systems should be electrically insulated from the Jet Unit **except that both the earth plate and the metal casings of the electrical transmitting equipment should be connected to the earth bonding system.**

1. An area of metal plate is required which is not painted and always immersed, even when at planing speeds. It is always in electrical contact with the sea water.
2. The area of metal plate is typically approximately 400 x 400 mm and should be located close to the equipment radiating electrical waves but well forward of the Jet Units.
3. For a metallic hull, the earth plate can be a thickened area of the hull, formed by welding additional plate inside the hull skin, up to 25 mm thick.
4. For a non metallic hull a separate metal earth plate must be fixed externally to the hull. It should be of material compatible with both the "bonding strip" and hull (stainless steel is likely to be the best option. It is not advisable to use copper as it can cause corrosion problems for other metals).
5. The "plate" should have a large stud welded to its centre and protruding inboard to which all the zero voltage wires from equipment can be connected.
6. The earth plate should be connected by an insulated wire to the vessels "Earth Bonding System".

7.1.5.Zinc Anodes

Anodes should not be painted over as they will not function as intended. If the anodes are being eaten away they are providing protection. They should be inspected and replaced when half consumed because the material that remains will not provide full protection. It is common for zinc anodes to be partially covered with a very loose scale. The colour of the scale depends on local water conditions but can typically be creamy white, light brown or green. This scale, providing it is loose (i.e. easily scraped off with a fingernail), is normal.

If the anodes are not being eaten away, they are not doing their job and the cause should be investigated. One reason could be the anode does not have good electrical contact between the component it is protecting and itself. The electrical resistance should be less than 0.2 ohms.

Poor quality zinc anodes may contain too much iron impurity. Such anodes tend to form a dense non-conducting oxide film (usually charcoal grey in appearance). This condition usually occurs in fresh water. To confirm this condition, test for continuity between the anode and the Jet Unit using a multimeter set to ohms. If the anode has to be scraped with a knife to get a conductive reading, the anode is oxidized and must be replaced. Sanding the anode surface provides a temporary solution, but it will form the oxide again.

JET UNIT ANODES

The anodes fitted to the Jet Unit are made from zinc alloy to US military specification MIL-A-18001K. These anodes are fitted to the Reverse Duct, Steering Deflector, Reverse Cylinder and the main body of the Jet Unit. Anodes are also fitted internally within the Tailpipe and in most Jet models, within the Intake.

HULL ANODES

Further anodes should be fitted on the Hull, sufficient for Hull protection, as determined using a portable reference electrode and digital voltmeter and / or a corrosion monitor.

The Hull anodes should remain immersed at all times. **Note that anodes fitted on the Transom of a planing speed craft will not be immersed when the craft is at speed and therefore will not be providing protection.**

7.1.6.In Service Checks

In Service, the following three items should be inspected regularly:

1. **The Bonding System:** For loose or corroded connections and test to ensure that electrical resistance is still low.
2. **All Sacrificial Anodes:** Replace when half corroded / eroded.
3. **Earth Leakage:** There should be no current leakage from any electrical item to the bonding system.

7.1.7.Anti Fouling Paint / Anti Seize Compound

CAUTION:

ANTI FOULING PAINTS:

Do not use copper oxide based anti-fouling paints. Tin base anti-fouling paints are suitable or anti-fouling paint suitable for an aluminium hull as recommended by the paint manufacturer. Leave all stainless steel parts polished and unpainted. Do not paint over the anodes.

ANTI-SEIZE COMPOUNDS:

Do not use anti-seize compounds which are based on graphite, nickel or copper flakes- these will cause corrosion. Anti-seize compounds, usually containing zinc flakes, are available for aluminium.

7.1.8.Impressed Current Protection

Impressed current protection may be used if desired. Follow the suppliers instructions. Impressed current systems should have a "fail safe" feature which prevents the potential falling below -1100mV referenced to a silver / silver chloride reference electrode.

7.2. ALUMINIUM, G.R.P. AND WOOD HULLS (OTHER THAN STEEL)

7.2.1. Earth Bonding System - (Not Normally Current Conducting)

Refer to Drawing 85114 "Earth Bonding System Recommendations and Layout" which shows the layout of the Earth Bonding System.

In the case of an aluminium Hull, an engine stringer or any other continuous longitudinal member may be used as the bonding strip. All junctions should preferably be welded, but if bolted, should be clean, have a good contact and be regularly inspected and maintained.

7.3. STEEL HULLS AND CARBON FIBRE REINFORCED GRP HULLS

CAUTION:

For steel and carbon fibre reinforced GRP hulls, the Jet Unit must be electrically insulated from the Hull.

An insulating kit is supplied with the Jet Unit.

7.3.1. Earth Bonding System (Not Normally Current Conducting)

Refer to **Drawing 85114** for details of insulating the Jet Unit from the Hull.

1. If a negative earth system is used on the vessel, it **MUST NOT** be connected to the Jet Unit.
2. Every part of the vessel electrical system should have **TWO** wires to it, a positive and a negative wire.
3. With electrical auxiliary equipment installation be guided by your electrician. Do not earth electrical equipment to the Jet Unit, but to a separate earth installed as far away from the Jet Unit as possible.

7.3.2.Checking the Insulation

1. WITH THE VESSEL OUT OF THE WATER

   The resistance between the Jet Unit(s) and the Hull should be 1000 ohms or greater. If the reading is below 1000 ohms, the fault should be investigated and rectified.

2. WITH THE VESSEL IN THE WATER

   For Steel Hulls:

   a) Place a silver / silver chloride half cell in the seawater.
   b) With the silver / silver chloride half cell connected to the 'common' of a high impedance digital voltmeter (set to read 0 to 2000 mV).
   c) Connect the 'positive' terminal to the hull and note the reading.
   d) Repeat with the 'positive' terminal connected to the Jet Unit(s) body.
   e) Place a large zinc anode in the seawater and electrically connect the hull to the anode.
   f) Repeat the digital voltmeter readings.
   g) If Jet Unit(s) is insulated from the hull, the mV readings for the Jet Unit(s) should not change.
   h) The mV readings for the hull should be more negative (eg: The reading could be -800mV without the large zinc anode connected and -850mV with the large zinc anode connected to the hull).
   i) This test can also be carried out with a Corrosion Monitor, if fitted.

3. **IN SERVICE** The insulation between the Jet Unit(s) and the steel hull should be regularly checked.

8. Overhaul

Overhaul of the Jet Unit should only be carried out after an examination indicates the need for an overhaul. **Refer to Section 6. Maintenance - General** for details of what examination of the Jet Unit is required.

PRIOR TO COMMENCEMENT OF OVERHAUL:

Disconnect and remove all Control Equipment attached to components being overhauled. This will prevent accidental damage to the less robust control equipment during Overhaul.

Ensure that all electrical and hydraulic connectors are properly marked and identified so they can be correctly replaced on completion of maintenance activities. Cover all hydraulic and electrical connectors to prevent the ingress of dirt and moisture and the loss of hydraulic fluid.

ON COMPLETION OF OVERHAUL

Perform the appropriate commissioning of the Jet Unit as described in this Jet Unit Manual **Section 3 Commissioning.**

Commissioning the Jet Unit. It is important that a commissioning of the vessel be carried out on completion of an overhaul activity as adjustments and connections may have been altered during the overhaul operation.

Commissioning the Controls System. Perform the appropriate commissioning of the Controls System as described in the Controls Manual supplied with this Jet Unit.

TOOLS

All tools required to carry out the maintenance activities on the Jet Unit are shown in **Section 6.5 Tools** of this Manual.

8.1. BEARING HOUSING ASSEMBLY OVERHAUL

WARNING:

EXERCISE EXTREME CARE IF WATER SEAL REPLACEMENT IS TO BE CARRIED OUT IN THE VESSEL AS WATER MAY ENTER THE VESSEL THROUGH THE INTAKE OPENING. NEVER LEAVE THE INSPECTION COVER REMOVED.

Overhaul of the Bearing Housing can be carried out with the Vessel afloat, provided that the water level remains below the Shaft Inspection Cover. Ballasting of the vessel may be necessary to achieve this.

CAUTION:

Exercise extreme care if the Bearing Housing is overhauled with the vessel afloat, as water may enter the vessel through the opening in the Jet Intake.

8.1.1.Bearing Housing Dismantling

Drawing HJ-273-01-001 refers

CAUTION:

The Water Seal should not be removed unless it is being replaced. The Water Seal will not perform correctly if it is removed and then reinstalled.

The Water Seal need only be replaced if it is leaking, or there is insufficient material left to last to the next inspection. Refer to Section 6. Maintenance, for details of the inspection required.

INITIAL WORK:

1. Uncouple the Driveshaft from the Jet Unit.
2. Remove the Coupling Grub Screw (50), prevent the Coupling from turning and unscrew the Coupling Nut (14).
3. Use a Puller to draw the Coupling free of the Mainshaft and, remove Coupling Key (11).
4. Unscrew the 3 Bearing Housing Retainer Nuts (53) from the Studs [47] and remove Spring Washers (56).
5. Slide Bearing Housing (21) off the Mainshaft [8] (the Housing will still contain Bearing (35), Outer Seal Sleeve (9) and Oil Seal (36).
6. Check that the 'O' Ring (38) is still retained in the Bearing Housing.
7. Withdraw the Counter Face Housing (21) and Inner Seal Sleeve(13).
8. Slide the Water Seal and Stationary Counter Face Assembly (26) forwards off the Mainshaft.

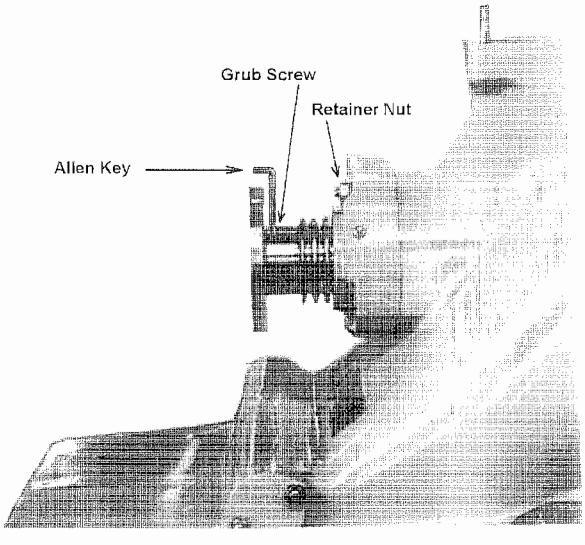

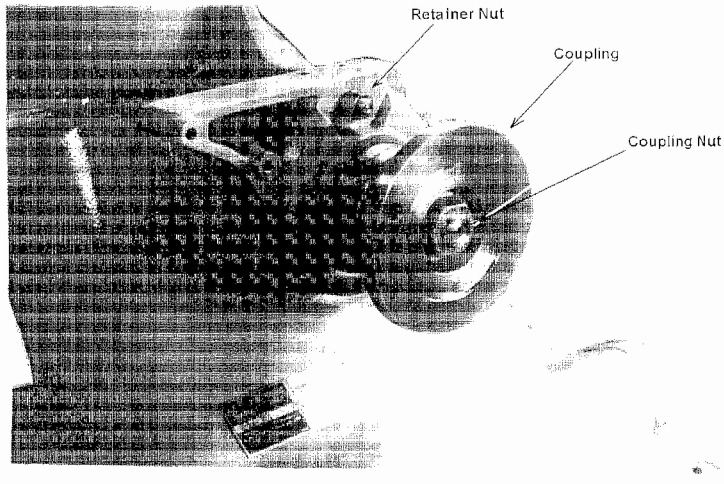

CHECKING FOR WEAR:

Check the following parts for wear and replace where necessary

1. Oil Seals and Seal Sleeves (36,9).
2. Bearing(35).
3. Water Seal and Stationary Face Assembly (26). Check to see if mating faces are scored or chipped. Always replace both Seal and Counter face even if one or other appears unworn.
4. 'O' Rings (37,38). Check for cuts or deformation.
5. Split Pin [33] located in the Mainshaft. Check for signs of wear and damage. Replace.
6. Thoroughly clean all parts.

8.1.2. Re-Assembly of Water Seal:

Drawing HJ-273-01-001 refers.

CAUTION:

All Water seal faces must be clean and free of dirt, oil and grease.

1. Replace the Waterseal retaining Split Pin [33] located in the Mainshaft.
2. To allow the Waterseal to slide on the Mainshaft, lubricate the Mainshaft with a 20:1 water and household detergent mix.
3. Carefully replace the Waterseal parts in the following order :- Cup Washer, Spring, Rubber Drive Ring and Rotating Carbon Seal Face.
4. Slide the Waterseal assembly down the Mainshaft, through the hole in the Intake until the Cup Washer rests against the Split Pin (33) fitted through the Mainshaft.
5. Fit the "O" Ring [37] into the Counter Face Housing (20).
6. Press the Inner Oil Seal [36] into the Counter Face Housing so that the lip faces towards the Coupling Flange **(Drawing HJ-273-01-001 refers).**
7. Apply marine grease to the 'O' Ring (37) and to the Counter Face Housing contact face with the Intake, fit the Counter Face Housing over the Mainshaft and push into place against the Intake face.

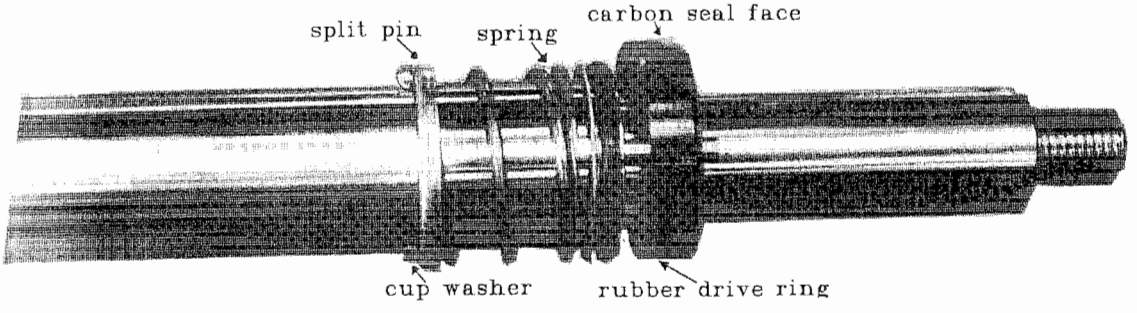

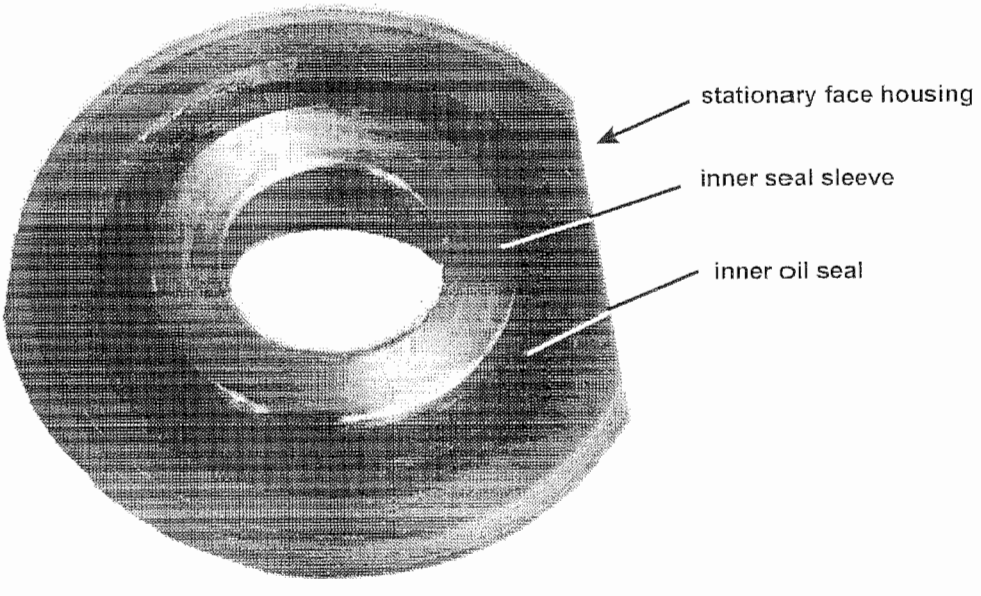

8.1.3.Re-Assembly of the Bearing Housing

Refer to Section 6.6. Threaded Fasteners and Section 6.7. Recommended Lubricants.

1. Grease the outside surface of the Inner Seal Sleeve [9].
2. Slide the Inner Seal Sleeve over the Mainshaft and push it through the inner Oil Seal [36] until the Seal Sleeve [9] rests firmly against the shoulder on the Mainshaft [8].
3. Press the Outer Oil Seal [36] into the Bearing Housing [21] until the Outer Oil Seal is firmly up against the shoulder in the Bearing Housing. Ensure that the Seal lip faces towards the Coupling Flange. **(Drawing HJ-273-01-001 refers).**
4. Pre-pack the Bearing (35) with grease then press the Bearing into the Bearing Housing [21].
5. Coat 'O' Ring [38] with grease and position the "O" Ring into the bore of the Bearing Housing next to the Bearing (35).
6. Fit the Bearing Housing over the Mainshaft and locate onto Studs (47). Fit Spring Washer (56) and Nuts (53), torque load to the recommended torque.
7. Coat the Bearing Carrier (10) with grease and gently slide the Bearing Carrier onto the Mainshaft and into the Bearing Housing through the centre of the Bearing [35].
8. Using a Soft Hammer, gently tap the inside of the Bearing Carrier [10] until it is level with the outside face of the Bearing [35].
9. Apply grease to the outside surface of the Inner Seal Sleeve (9) and slide the Inner Seal Sleeve along Mainshaft towards the Bearing Housing.
10. Push the Outer Seal Sleeve through the Oil Seal [36] fitted in the Bearing Housing until the Outer Seal Sleeve rests firmly against the Bearing [35].
11. Lightly grease the bore and key way of the Coupling Flange, the key way of Mainshaft and the face of the Coupling Nut (14).
12. Fit the Coupling Key (11) to the Mainshaft and tap into position with a soft hammer.
13. Fit the Coupling to the Mainshaft, ensuring that the key way in the Coupling aligns with the Coupling Key (11) fitted to the Mainshaft.
14. Fit the Coupling Nut (14) to the Mainshaft. Prevent the Coupling from turning and torque load the Coupling Nut [14] to 230Nm. (170 lbs/ft).
15. Check that the Mainshaft rotates freely before connecting the Coupling to the Driveshaft.

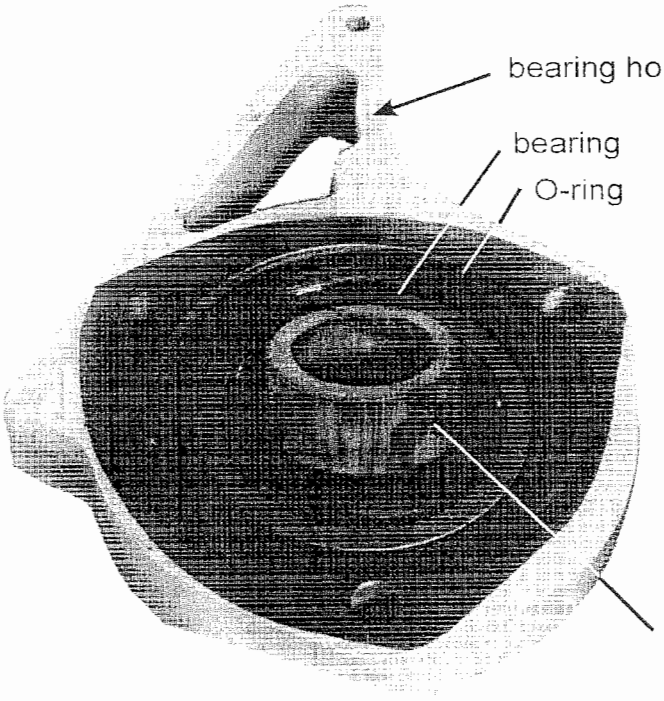
bearing housing
bearing
O-ring
bearing carrier

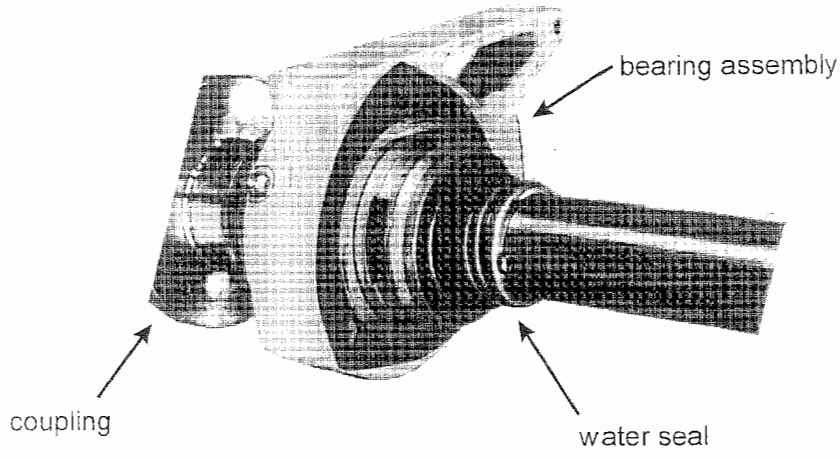
bearing assembly
coupling
water seal

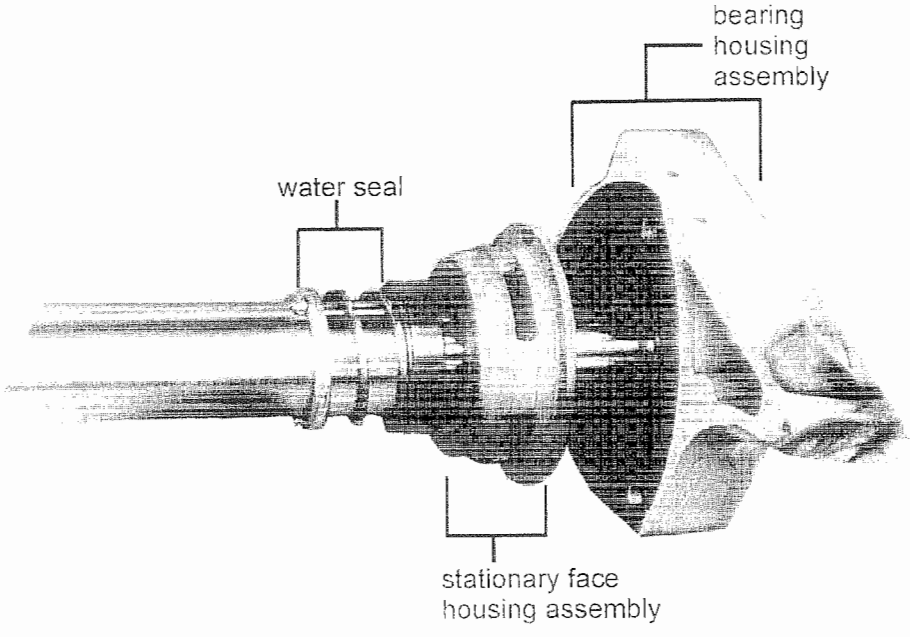
bearing
housing
assembly
water seal
stationary face
housing assembly

8.2. SCREEN RAKE ASSEMBLY OVERHAUL (If Fitted)

Drawing HJ-273-09-002 refers.

The Screen Rake need only be dismantled if it is suspected of being defective for the following reasons:-

1. The Port [4] and Starboard [3] Screen Rake Bearings are worn.
2. "O" Rings [9] and [10] are leaking.
3. The Screen Rake [5] is damaged or bent.

8.2.1.Screen Rake Removal

Drawing HJ-273-09-002 refers.

To remove the Screen Rake Assembly, the vessel should be removed from the water to allow access to the underside of the vessel. To remove the Screen Rake, carry out the following:-

1. Support the Screen Rake beneath the vessel.
2. From inside the vessel, disconnect and remove the Tension Spring [1] from the Rake Actuator [8] and Spring Actuator Bracket [6] on the starboard side of the Intake, in the vicinity of the Coupling Flange.
3. Remove Nut [12], Spring Washer [14], Washer [2] and the Cotter Pin [7] securing the Rake Actuator [8] to the Screen Rake [5].
4. Remove the Rake Actuator [8].
5. With the Screen Rake supported beneath the vessel. From inside the vessel, remove the Screen Rake Bearing Attachment Nuts [13] and Spring Washers [15] from the Starboard Screen Rake Bearing [3].
6. Whilst ensuring that the Screen Rake is supported, withdraw the Starboard Screen Rake Bearing [3]. The starboard Screen Rake pivot point will now rest on the Screen Rake Bearing housing in the Intake.
7. From beneath the vessel, whilst supporting the Screen Rake move the Screen Rake fully to starboard to allow the port Screen Rake pivot point to clear the Port Screen Rake Bearing [4].
8. With the port Screen Rake pivot point to clear of the Port Screen Rake Bearing [4], move the Screen Rake to starboard to allow the Starboard Screen Rake pivot point to clear the starboard Screen Rake Bearing housing in the Intake.
9. Carefully lower the Screen Rake [5] from the underside of the Intake.
10. Check the Screen Rake for distortion, damage and excessive wear at the Screen Rake Bearing attachment points. Repair or replace as required.
11. Remove the Screen Rake Bearing Attachment Nuts [13] and Spring Washers [15] from the Port Screen Rake Bearing [4] and withdraw the Port Screen Rake Bearing from the Intake.
12. Check the "O" Rings [9] and [10] on the Starboard Screen Rake Bearing and replace if cut, damaged or distorted.
13. Check the Starboard Screen Rake Bearing for wear and damage. Replace as required.
14. Remove the Grease Nipple [11] from the Starboard Screen Rake Bearing [3] and ensure that the grease channels are not blocked.
15. Refit the Grease Nipple [11].
16. Check the "O" Ring [10] on the Port Screen Rake Bearing and replace if cut, damaged or distorted.
17. Remove the Grease Nipple [11] from the Port Screen Rake Bearing [4] and ensure that the grease channels are not blocked.
18. Refit the Grease Nipple [11].
19. Thoroughly clean all components and examine for wear, damage and distortion.

8.2.2.Screen Rake Refitting

Drawing HJ-273-09-002 refers.

1. Fit a new "O" Ring [10] on the Port Screen Rake Bearing and smear the shaft of the port Screen Rake Bearing with grease.
2. Fit the Port Screen Rake Bearing [4] to the Studs [44] (Drawing HJ-273-01-001 refers) on the port side of the Intake. Secure with Spring Washer [15] and Nuts [13], ensuring that the Grease Nipple [11] is positioned at the top of the bearing.
3. Torque load to the recommended torque.
4. From beneath the vessel, whilst supporting the Screen Rake and before fitting the Starboard Screen Rake Bearing, feed the starboard Screen Rake pivot point through the starboard Screen Rake mounting point in the Intake.
5. Raise the port side of the Screen Rake and align the pivot point of the Screen Rake with the Port Screen Rake Bearing [4].
6. Push the Screen Rake into the Port Screen Rake Bearing [4].
7. Inside the vessel, fit new "O" Rings [9] and [10] to the Starboard Screen Rake Bearing [3] and smear the shaft of the Starboard Screen Rake Bearing with grease.
8. Fit the Starboard Screen Rake Bearing [3] over the Starboard Screen Rake pivot point which is protruding through the Intake.
9. Align the Screen Rake Bearing [3] with the Studs [44] on the Intake (Drawing HJ-273-01-001 refers), ensuring that the Grease Nipple [11] is positioned at the top of the bearing.
10. Secure with Spring Washer [15] and Nuts [13]. Torque load to the recommended torque.
11. Fit the Screen Rake Actuator [8] to the Starboard Screen Rake pivot point and Fit Cotter Pin [7] and secure with Washer [2], Spring Washer [14] and Nut [12]. Torque load to the recommended torque.
12. Connect one end of the Spring [1] to the Spring Anchor Point [6] and connect the other end of the Spring [1] to the Screen Rake Actuator [8].
13. Grease the port and Starboard Screen Rake Bearings through the Grease Nipples [11] on the top of the Screen Rake Bearings.
14. Remove the support from the Screen Rake beneath the vessel.
15. Carry out a functional check of the Screen Rake Assembly. Have someone positioned beneath the vessel to observe that the Screen Rake operates without fouling on the Intake Screen.

8.2.3.Screen Rake Blanking Plugs

Drawing HJ-273-09-001 refers.

Should it be necessary to run the Jet Unit without a Screen Rake, Blanking Plugs [1] can be fitted in place of the Port and Starboard Screen Rake Bearings.

To fit the Blanking Plugs, carry out the following procedure:

1. Ensure that "O" Ring [4] is not damaged, cut or distorted.
2. Liberally coat the shaft of the Blanking Plug with grease and fit onto Studs [44] (Drawing HJ-273-01-001 refers).
3. Secure with Spring Washer [2] and Nut [3]. Torque load to the correct torque.
4. Repeat for the second Blanking Plug.

8.3. HATCH EXTENSION

Drawing HJ-273-10-004 refers.

C.W.F. Hamilton & Co Ltd can supply, as an optional extra, an Inspection Hatch Extension [1]. This item enables work to be carried out on the Jet Unit where normally by removing the Inspection Hatch Cover may allow water to enter the vessel. The Hatch Extension raises the height of the Inspection Hatch by 140 mm.

WARNING:

EXTREME CARE IS REQUIRED WHENEVER THE INSPECTION COVER IS REMOVED AS WATER MAY ENTER THE VESSEL THROUGH THIS OPENING. NEVER LEAVE THE INSPECTION COVER REMOVED WITHOUT CONSTANT MONITORING OF THE WATER LEVEL.

8.3.1.Hatch Extension Fitting

To fit the Inspection Hatch Extension [1] carry out the following operation:-

1. Ensure that the water level is below the level of the Inspection Hatch Cover.
2. Ballast the bow end of the vessel to ensure that water does not enter through the Inspection Hatch.

Drawing HJ-273-01-001 refers.

3. Remove Nuts [53] and Spring Washers [56] from the two Studs [46] retaining the Inspection Hatch Cover [19].
4. Remove the Inspection Hatch Cover [19] and O Ring [40].
5. Check the O Ring [40] and replace if damaged or distorted.
6. Smear O Ring [40] with grease and refit to the O Ring groove in the Inspection Hatch Cover [19].

Drawing HJ-273-10-004 refers.

7. Ensure that O Ring [5] on the base of the Inspection Hatch Extension [1] is not damaged or distorted.
8. Smear the O Ring [5] with grease and refit the Hatch Extension [1] over the Studs [46] **(shown on Drawing HJ-273-01-001).**
9. Secure with Spring Washers [56] and Nuts [53] **(Shown on Drawing HJ-273-01-001)** and torque load to the recommended torque.
10. Fit the Inspection cover [19] to Studs [46] **(shown on Drawing HJ-273-01-001)** and secure with Spring Washer [4] and Nut [3]. Torque load to the recommended torque.
11. Once the vessel is "In Use", ensure that the Hatch Extension is not leaking water.

8.3.2.Hatch Extension Removal

The removal of the Hatch Extension is the reverse of the fitting operation shown above.

WARNING:

EXTREME CARE IS REQUIRED WHENEVER THE INSPECTION COVER IS REMOVED, AS WATER MAY ENTER THE VESSEL THROUGH THIS OPENING. NEVER LEAVE THE INSPECTION COVER REMOVED WITHOUT CONSTANT MONITORING OF THE WATER LEVEL.

8.4. REVERSE ASSEMBLY OVERHAUL

NOTE:

The Maintenance operations detailed in this Section should be carried out when the Vessel is slipped.

For fault finding with the Reverse System, refer to the Controls Manual supplied with this Jet Unit.

8.4.1. Reverse Duct Removal

Drawing HJ-273-07-001 refers.

1. Whilst supporting the Reverse Duct, remove Split Pin [8] from the Cylinder Pivot Pin [6].
2. Remove M10 Washer [7] and withdraw the Cylinder Pivot Pin [6] from the Reverse Duct attachment point.
3. Move the Reverse Duct through its full range if movement to check for stiffness or slack bushes.
4. Lower the Reverse Duct.
5. While supporting the Reverse Duct, remove the Reverse Duct Pivot Pins [4] and Polywashers [3].
6. Examine the Shouldered Pivot Bushes [2] and Threaded Bushes [5] for wear and damage and replace if required.

8.4.2. Reverse Cylinder Removal

Drawing HJ-273-07-001 refers.

The Reverse Cylinder need only be dismantled if it is suspected that a seal has failed and hydraulic oil is found leaking along the Piston Rod Assembly from either end of the cylinder. This indicates that the Piston Rod Seals are defective and must be replaced

This operation should be carried out in a clean workshop environment where the cleanliness of components can be maintained.

Also refer to the **Controls Manual Overhaul Section** for information on the Reverse Assembly.

1. With the Reverse Duct disconnected from the Reverse Cylinder, disconnect the hydraulic hoses attached to the Reverse Cylinder.
2. Disconnect the Morse Ball Joint [37] from the Lever [31].
3. Remove the Nuts [28], Spring Washers [29] and Studs [42] securing the Reverse Cylinder to the Jet Unit.
4. Secure the Front Hemi Seat [13] and Rear Hemi-Seat [14] with tape and remove the Reverse Cylinder.

8.4.3. Dismantling the H.S.R.X. Reverse Cylinder

Refer to Drawing HJ-273-07-001

1. Disconnect Hose [H2] and Hose [H1] from the HSRX Reverse Cylinder. **Refer to Drawing CT-HSE-05-011 Hose Kits Stainless Steel Fittings HJ-273 in the Controls Manual Drawing Package.**
2. Remove the tape securing the Front Hemi-Seat [13], Rear Hemi-Seat [14] and Mounting Plate [16] to the Front Head [15].
3. Dismantle the Front Hemi-Seat [13], Rear Hemi-Seat [14] and Mounting Plate [16] from the Front Head [15].
4. Remove the Cable Clamp Kit Set [38] from the Cable Mounting Plate [26] by removing the Nyloc Nuts [39] and Screws.
5. Remove the Morse Cable Ball Joint [37] from the Lever [31].
6. Slacken the Set Screw [31] securing the Lever [31] to the end of the Spool [20] and remove the Lever.
7. Remove the Nylon Washer [41] from the end of the Spool at the Back Head end of the Cylinder.
8. Remove the Pressure Relief Valve [36] from the Back Head [22].
9. Nipple [32] fitted to the Front Head [15] can be left fitted unless it requires replacing.
10. Pushlock Fitting [35] can be left fitted unless it requires replacing.
11. Remove the M6 Nuts [28] and Spring Washers [29] securing the Cable Mounting Plate [26] to the Back Head and remove the Cable Mounting Plate.
12. Remove the Back Head [22] from the Cylinder [19].
13. Remove the Bearing [25] from the Back Head [22].
14. Remove the Spool [20] from the Cylinder [19].
15. Remove the Cylinder [19] from the Front Head [15].
16. Remove the Piston Shaft Assembly [10] from the Front Head [15].

NOTE:

The Piston Shaft Assembly is not to be dismantled further and should only be replaced as a complete item.

1. Unscrew the 4 x threaded Tie Rods [28] from the Front Head [15].
2. Check the Stop Pin [40] fitted to the Back Head [22], for damage, wear and security of fitment. **This Pin does not need to be removed unless worn, loose or damaged.**
3. Check the Anti Rotation Pin [11] fitted to the Front Head [15], for damage, wear and security of fitment. **This Pin does not need to be removed unless worn, loose or damaged.**
4. Remove and discard all O Rings and Seals.
5. Thoroughly clean and inspect all components for wear and damage and replace as required.

8.4.4.Assembly of the H.S.R.X. Reverse Cylinder

Refer to Drawing HJ-273-07-001

Recommended Oils and Greases to be used for assembly of the H.S.R.X. Reverse Assembly.

{A} BP Energrease MM EP2 or equivalent.
{B} Mineral based oil such as recommended hydraulic oil (Refer to Section 6. Maintenance).
{C} Non Seize Compound. (Rocl YIGG, Jet-Lube, Nikal, etc.).

1. Grease and fit the 'U' Seal [24] to the Back Head [22], ensure that the U Seal is correctly orientated.
2. Grease 'O' Ring Seal [18] **{Using A}** and fit to Back Head [22].
3. Grease a second 'O' Ring Seal [18] **{Using A}** and fit to Front Head [15].
4. Grease 'O' Ring Seal [23] **{Using A}** and fit to the Rear Hemispherical Seat [14].
5. Grease and fit the Piston Seal [21] to the Piston Shaft Assembly [10], ensuring that the Scarf Joint on the Seal Backing Ring is correctly mated.
6. Grease and fit the 'U' Seal [17] and Scraper Seal [12] to the Front Head, ensuring that the Seals are correctly orientated.
7. If the Stop Pin [40] has been removed, apply Loctite 680 to one end of the Stop Pin [40] and fit to the Back Head [22].
8. If the Anti Rotation Pin [11] has been removed, apply Loctite 680 to on end of the Anti Rotation Pin [11] and fit to the ball of the Front Head [15].
9. Apply Loctite 262 to one end of the 4 x threaded Tie Rods [27] and tighten into the Front Head [15].
10. Grease both outside ends of the Cylinder [19] **{Using A}** and push fit one end of the Cylinder into the Front Head [15].
11. Lubricate the Piston Shaft Assembly [10] **{Using B}** and fit to the Front Head [15].
12. Ensure that the Dot on the outer end of the Piston Shaft Assembly [10] is positioned uppermost.

NOTE:

If the Piston Shaft Assembly is wrongly positioned, the HSRX will not function correctly.

13. Fit the Bearing [25] to the Back Head [22].
14. Lubricate Spool [20] **{Using B}**.
15. Whilst supporting the Seal [24] in the Back Head, insert the Spool [20] through the Bearing [25] and Seal [24].
16. Assemble Back Head and Spool combination onto the Cylinder Front Head combination, ensuring that the 4 Tie Rods [27] pass through the Back Head [22].
17. Assemble the Cable Mounting Plate [26] onto the Back Head, over the 4 Tie Rods and secure with 4 x M6 Nuts [28] and Spring Washers [29].

NOTE:

Ensure that the Cable Mounting Plate [26] is correctly orientated for either Left Hand or Right Hand Morse Cable fit.

18. Hold the Cylinder upright with the Shaft Assembly at the top. Ensure that the Shaft Assembly is fully retracted.
19. Rotate the Spool [20] through 360° (this will help to centralize the Bearing in the Back Head).
20. Torque load the 4 x M6 Nuts [28].
21. Fit the Nylon Washer [40] to the Spool at the Back Head end of the Cylinder and fit Lever [31] ensuring that the boss on the Lever is facing towards the Cylinder.
22. Fit the Set Screw [30] using Loctite 262 and tighten to secure Lever in position.
23. Attach and tighten the Cable Clamp Kitset [38] to the Cable Mounting Plate [26] with 2 x Nyloc Nuts [39] and Screws.

24. Assemble the Front Hemi-Seat [13], Rear Hemi-Seat [14] and Mounting Plate [16] onto the Front Head [15] and secure with tape until the Cylinder is re-fitted to the Jet Unit.
25. Fit the Back Pressure Valve [36] (Pressure Relief Valve Type CP208-3-B-O-A-B-050, pre-set at 500 PSI) to the Back Head [22]. Torque load to 40 Nm .
26. If the Nipple [32] has been removed during overhaul, refit with a new Seal Ring [33] and Nitrile O Seal [34], to the Front Head [15] and tighten.
27. If the Pushlock Fitting [35] has been removed during overhaul, refit to the Back Head [22] and tighten.
28. To refit the HSRX Cylinder to the Jet Unit Intake using 4 x M6 Studs [43], **{Coat threads with C}. Refer to Section 8.4.5. Reverse Cylinder Refit to Jet Unit.**
29. Attach the Morse Ball Joint [37] to the centre hole in the Lever [31].
30. **If possible workshop test the Reverse Cylinder before reinstalling into the vessel.**

8.4.5. Reverse Cylinder: Refit to Jet Unit

Drawing HJ-273-07-001 refers.

Also refer to the Controls Manual Overhaul Section for additional information on the Reverse System.

1. Ensure that the Cable Mount Plate [26] has been fitted to the front of the Reverse Cylinder and is correctly orientated for the fit required.
2. Feed the Shaft Assembly end of the Reverse Cylinder through the Intake hole. Engage the hemi-spherical seats over the four Studs [42] and remove any securing tape from the Front and Rear Hemi-Seats.
3. Fit Spring Washers [29] and Nuts [28] and torque load to 5 Nm (3.7 lb/ft).
4. Connect the Reverse Cylinder to the Reverse Duct using Cylinder Pivot Pin [6] and Washer [7] and secure with Split Pin [8].
5. Reconnect the Morse ball Joint [37] to the Lever [31].
6. **Connect Hose connections in accordance with the Controls Manual Drawing CT-HSE-05-011.**

8.4.6. Reverse Duct: Refit to Jet Unit

Drawing HJ-273-07-001 refers.

1. Examine the Shouldered Pivot Bushes [2] and Threaded Bushes [5] for wear and damage and replace if required.
2. Align the Reverse Duct with the Threaded Bushes [5] in the Tailpipe of the Jet Unit.
3. Fit the Polywashers [3] to the Reverse Duct Pivot Pins [4].
4. While supporting the Reverse Duct, refit the Reverse Duct Pivot Pins [4] and Polywashers [3].
5. **Torque load to 400 Nm (295 lbs/ft).**
6. Raise the Reverse Duct to align the Reverse Duct attachment point with the Reverse Cylinder Shaft Assembly.
7. Fit Cylinder Pivot Pin [6] and Washer [10] and secure with Split Pin [8].

8.5. STEERING ASSEMBLY - OVERHAUL

Drawing HJ-273-06-001 refers

The Steering Assembly may use either a Manual Cable operating System or it may use a Seastar Hydraulic Cylinder to operate the Steering Tiller.
If the Jet Unit is fitted with a Seastar Steering Cylinder, refer to the Seastar Maintenance Manual for any maintenance required.
If the Jet Unit uses a Manual Cable System, refer to the relevant Controls Manual supplied with the Jet Unit.

8.5.1.Steering Cylinder Removal

The Steering Cylinder need only be dismantled if it is suspected that a seal has failed and hydraulic oil is found leaking along the Piston Rod Assembly from either end of the cylinder. This indicates that the Piston Rod Seals are defective and must be replaced. Refer to the Seastar Manual for information on Seal replacement.

This operation should be carried out in a clean workshop environment where the cleanliness of components can be maintained.

1. Disconnect any Sensors attached to the Tiller [19]. **Refer to the Overhaul Section of the Controls Manual.**
2. Disconnect the Steering Cylinder hose connections from the Seastar Steering Cylinder, ensuring that all connections are fitted with blanking plugs to prevent the ingress of moisture and dirt and the leaking of hydraulic oil.
3. Disconnect the Steering Cylinder Rod End from the Tiller [19].
4. Remove the 4 Nuts securing the Cylinder in position and remove the Steering Cylinder from the vessel.

Check all components for signs of corrosion, wear and damage and replace as required. **Refer to the Seastar Manual for information on Seal replacement.**

8.5.2.Steering Cylinder Refit to Jet Unit.

1. Refit the Steering Cylinder in the position prepared by the Boat Builder and secure as required.
2. Reconnect the Cylinder Rod End to the Tiller [19].
3. Reconnect the Steering Cylinder Hose Connections to the Steering Cylinder. **Refer to the Controls Manual Drawing Package for correct Hose connection layout.**
4. Re connect any Sensors that were previously attached to the Steering Crank. **Refer to the Overhaul Section of the Controls Manual.**

8.5.3.Steering Assembly Removal

Drawing HJ-273-06-001 refers.

Disconnect the Steering Tiller [19] from the Steering Control Cable.

1. Check the Steering Shaft for:-
   a) Freedom of movement
   b) Excessive wear in Bushes [21] and [23].
   c) Worn or damaged Scraper [20] and Seal [22].
   d) Excessive wear in the ball end of the Steering Crank [15].
2. Replace Steering Bushes and Seals if damaged or worn.
3. Remove Nut [13] Spring Washer [14] and Washer [17] and remove Cotter [16] from the Steering Crank.
4. Push the Steering Shaft [18] forwards and slide the Steering Crank off the end of the Steering Shaft.

8.5.4.Nozzle / Nozzle Housing Removal

Drawing HJ-273-06-001 refers.

1. Remove the Steering Crank [15] from the Steering Crank Bush [3].
2. Check the Steering Crank Bush [3] for security and wear. Replace if loose or worn.
3. Rotate the Nozzle [1] through its full arc of travel to check for stiffness or wear in the Nozzle Bushes [5].
4. Loosen the Cap Screws [25] securing the JT Steering Lip Seals [24] to the inner face of the Nozzle [13] and ensure that the Lip Seals are free to move.
5. Using a flat bladed screwdriver, flatten off the tab on Lock Washer [7] retaining Pivot Pin [6] at the top and bottom of Nozzle [1].
6. Whilst supporting the Nozzle, unscrew and remove the upper and lower Pivot Pins [6] and Lock Washers [7].
7. Hook out Thrust Washers [4] from upper and lower positions.
8. Rotate the Nozzle to align the upper and lower Bushes [5] with the cut outs in the Nozzle Housing [2].
9. Push the top of the Nozzle towards the Jet Unit to release the lower Nozzle Bush from the Nozzle Housing.
10. Pull the Nozzle rearwards to remove the Nozzle from the Nozzle Housing.
11. To remove the Nozzle Housing, remove the Nuts [21] and Spring Washers [23] from the Studs [19] securing the Nozzle Housing to the Tailpipe.
12. Hit the Nozzle Housing sideways with a Soft Hammer and remove the Nozzle Housing off the Studs [19].
13. Clean all parts thoroughly and examine for wear and damage and replace as necessary.

INSPECTING THE STEERING NOZZLE [13]

Examine the following components for wear or damage and repair or replace as necessary:-

a) **Nozzle Pivot Bushes [11].** Replace if worn or damaged.
b) **Pivot Pins [15].** Replace if worn or damaged.
c) **Deflector Crank Bush [7].** Check for wear or damage. Replace if worn.
d) **Steering Crank [12].** Check the condition of the Crank Ball, replace if excessively worn.
e) **Thrust Washers [10].** Check for wear or damage. Replace if worn.
f) **Lock Washers [5].** Discard and replace once removed. **Do not re-use.**
g) **Cotter [1].** Check the condition. Replace if damaged.
h) **JT Steering Lip Seal [24].** Check the condition and security of the Lip Seal. Replace if damaged or worn.
i) **Anode [3].** Check the condition. Replace if more than $^{2}/_{3}$ rds corroded.

REPLACING THE JT STEERING LIP SEALS [24]

The JT Steering Lip Seals can be replaced without separating the Nozzle from the Nozzle Housing. To replace the JT Steering Lip Seal [24], carry out the following actions:-

a) With the JT Steering Nozzle [13] and the Nozzle Housing [9] removed complete from the Jet Unit Tailpipe and with the Nozzle and Nozzle Housing placed face down on a work bench, unscrew and remove the 4 Cap Screws [25], Spring Washers [26] and Flat Washers [27] at the rear of the Nozzle securing the 2 JT Steering Lip Seals [24] to the rear face of the Nozzle.
b) Carefully remove the 2 JT Steering Lip Seals [24] from the rear of the Nozzle Housing and discard.
c) Replace with 2 new JT Steering Lip Seals, ensuring that the JT Steering Lip Seals [24] are fitted with the overhang of the Seal facing outwards when the Seal is fitted to the JT Steering Nozzle [13]. (Will be facing towards the front of the Jet Unit when completely assembled to the Nozzle Housing [9]).
d) Refit the 2 new JT Steering Lip Seals [24] in position and adjust the Lip Seal [24] to just contact the spherical inner surface of the Nozzle Housing [9].

NOTE:

There is some movement in the Lip Seals [24] when loosely secured with Cap Screws [25], this is to allow the Lip Seals to be adjusted to fit the inside of the Nozzle Housing [9].

e) Thoroughly clean the threads of the Cap Screws [25] and apply Loctite 222.
f) Secure the JT Steering Lip Seals [24] using Cap Screws [25], Flat Washers [27] and Spring Washers [26]. Tightened to the recommended torque.
g) Refit the JT Steering Nozzle [13] complete with the Nozzle Housing [9] to the Tailpipe as shown in **Section 8.5.5. "Nozzle / Nozzle Housing Refit".**

REPLACING THE NOZZLE CRANK BUSH [7]

To replace the Nozzle Crank Bush [7], carry out the following operation:-

a) With the Nozzle removed from the Nozzle Housing and taken to a workshop facility.
b) Carefully cut and peel out the old Nozzle Crank Bush [7] from the Nozzle Boss.
c) Clean out the bore of the Nozzle Boss.
d) Apply Loctite 262 to the bore of the Nozzle Boss and to the replacement Crank Bush [7].
e) Carefully press the Crank Bush [7] into the Nozzle Boss ensuring that the Bush is pressed in evenly and does not protrude above the sides of the Nozzle Boss.
f) **Ensure that the Crank Bush [7] is firmly pushed fully into the Nozzle Boss until the Crank Bush bottoms out against the shoulder at the base of the Nozzle boss.**
g) Clean off any surplus Loctite from around the replacement Bush.

REPLACING THE STEERING SHAFT BUSH [4]

Examine the Steering Shaft Bush [4] located on the Tailpipe. If the Steering Shaft Bush is found to be worn and requires replacement, carry out the following action:

a) Ensure that the Steering Shaft [14] has been removed. **Refer to Section 8.5.3. "Steering Assembly Removal".**
b) Drift out the Bush [4] and clean out the Steering Shaft Bush bore.
c) Apply a thin coat of Loctite 747 or Primer "T" to the mating surfaces of the Bush [28] and bore and allow to dry.
d) Coat the primed surfaces of the Bush and bore with Loctite 262.
e) Fit the Bush into the bore and rotate twice to distribute the Loctite.
f) Wipe off any excess Loctite.

REPLACING THE STEERING SCRAPER HOUSING SEALS

If the Scraper Seal [16], Seal [17] or the Steering Shaft Bush [8] are worn or damaged, new Seals and a Bush should be fitted to the Intake Flange. To carry out this operation:-

a) Ensure that the Steering Shaft [14] has been removed. **Refer to Section 8.5.3. "Steering Assembly Removal".**
b) Remove the Scraper Seal [16] and take note of the way the Seal is fitted. **(With the lip of the Scraper Seal facing aft).**
c) Remove the Seal [17] and take note of the way the Seal is fitted. **(With the Seal lip facing aft, refer to Drawing HJ-273-06-001).**
d) Remove the Steering Shaft Bush [8].
e) Clean out the bore of the Steering Shaft.
f) Smear a new Seal [17] with grease ensuring that the inner face of the Seal is packed with grease.
g) Press the Seal [17] into the Scraper Housing bore ensuring that the Seal lip faces aft.
h) Fit the Steering Shaft Bush [8].and gently tap into position against the rear face of Seal [17].

i) Smear a new Scraper Seal [16] with grease and fit the Scraper Seal into the Bore of the Tailpipe, pushing the Scraper Seal firmly home against the rear face of the Steering Shaft Bush [8], ensuring that the Scraper Seal is fitted correctly. **(With the lip facing aft).**

NOTE:

Ensure that the lips on the Seal [17] and the Scraper Seal [16] are facing aft when fitted. Refer to Drawing HJ-273-06-001.

REPLACING THE PIVOT PIN BUSHES [11]

The Nozzle is fitted with two Pivot Pin Bushes [11] to accommodate the Steering Nozzle Pivot Pins [15].
Inspect the Pivot Pin Bushes [11] in the Nozzle. These should be replaced if any signs of wear or damage is found.

a) The Nozzle should be removed from the Nozzle Housing, and taken to a workshop facility.
b) Using a suitable Press, carefully press out the old Pivot Pin Bushes [11]. It may be necessary to apply light heat to the Nozzle in the area of the Bushes to break the Loctite Seal.
c) Ensure that the Pivot Pin Bush bores are cleaned of old loctite.
d) Apply a thin coat of Loctite 747 or Primer "T" to the mating surfaces of the Pivot Pin Bush [11] and the Pivot Pin Bush bore and allow to dry.
e) Coat the primed surfaces of the Pivot Pin Bush and Pivot Pin Bush bore with Loctite 262.
f) Press the new Pivot Pin Bushes [11] fully home into the Nozzle, ensuring that the Bushes are pressed in evenly and are fully home in the recess in the Nozzle.
g) Clean off any surplus Loctite from around the replacement Bushes.

REPLACING THE JT STEERING NOZZLE ANODE [3]

a) Remove Nuts [20] and Spring Washers [22] from Studs [18] securing the Anode [3] to the underside of Nozzle [13].
b) Remove the Anodes [3] from the underside of the Nozzle.
c) The mating surfaces of the Anode / Nozzle should be scraped clean to ensure a good electrical contact.
d) Fit a new Anode [3] and attach to the Studs [18] on the underside of the Nozzle with Nuts [20] and Spring Washers [22]. Torque load to the recommended torque.

8.5.5.Nozzle / Nozzle Housing Refit

1. Ensuring that the Steering Crank boss is uppermost, rotate the Nozzle [1] to align with the cut outs in the Nozzle Housing.
2. With the nose of the Nozzle tilted slightly upwards, feed the upper nozzle mounting point into the Nozzle Housing.
3. Push down on the nose of the Nozzle ensuring that the lower nozzle mounting point passes into the Nozzle Housing.
4. Rotate the Nozzle to align the upper and lower Bushes [5] with the upper and lower openings in the Nozzle Housing.
5. Smear the threads of the Pivot Pins [6] with grease.
6. Refit the lower Thrust Washer [4] and locate with the Pivot Pin [6] fitted with a new Lock Washer [7]. Screw the Pivot Pin in slightly to retain the Nozzle in position.
7. Refit the upper Thrust Washer [4] and locate with the Pivot Pin [6] fitted with a new Lock Washer [7].
8. Tighten both Pivot Pins [6] and torque load to 200 Nm (150 lbs/ft).

NOTE:

If the JT Steering Lip Seals are to be changed, they should be refitted at this point. Refer to "Replacing the JT Steering Lip Seals [24]" on the previous pages.

9. Rotate the Nozzle through its full arc of travel to ensure that there is no stiffness or binding of the Nozzle.
10. Bend over the locking tab on Lock Washers [7] to secure the Pivot Pins in position.
11. Refit the Nozzle complete with Nozzle Housing to the Tailpipe of the Jet Unit and secure to Studs [19] with Spring Washers [23] and Nuts [21].

8.5.6. Steering Assembly Refit

Drawing HJ-273-06-001 refers

1. Smear the ball of the Steering Crank [15] with grease and refit to the Steering Crank Bush [3].
2. Pull the Steering Shaft [18] rearwards and slide the Steering Crank onto the end of the Steering Shaft.
3. Refit Cotter [16] to the Steering Crank [15] using Nut [13] Spring Washer [14] and Washer [17] and torque load to the recommended torque.
4. Reconnect the Steering Tiller [19] to the Steering Control Cable.

8.6. TRANSOM SEAL ASSEMBLY OVERHAUL

Should it be necessary to remove the Transom Seal Assembly for repair or replacement of damaged or worn components, carry out the following operation.
To replace the Transom Seal [5] or the Transom Seal Clamp [4], the Reverse Duct must be removed to allow access.

NOTE:

The Transom Seal [5] and Transom Seal Clamp [4] should not be removed unless they are suspected of leaking or unless the Transom Seal Clamp [4] or the Transom Plate [3] are corroded or damaged.

8.6.1.Transom Seal Removal

GRP HULLS.

Drawing HJ-273-08-001 (for GRP Hull) refers.

To remove the Transom Seal Clamp [4] and replace the Transom Seal [5], carry out the following operation:

1. Remove the Reverse Duct as shown in **Section 8.4.1. Reverse Duct Removal.**
2. Slacken the two securing Nuts on the Transom Seal Clamp and remove, taking care not to lose the Transom Seal Clamp Filler Piece [1] fitted between the Transom Seal and the Transom Seal Clamp at the bottom of the Transom Seal Clamp.
3. Slacken and remove the Transom Plate attachment Screws [9], 2 Flat Washers [13] (located on either side of the Transom Plate and the Transom), Spring Washers [15] and Nut [11].

NOTE:

The Transom Plate [3] is manufactured in two pieces to assist the fitting and removal.

4. Remove the Transom Plate.
5. Remove the Transom Seal [5] from around the Jet Unit and Transom and discard.
6. Clean off the Transom Plate [3] and the Transom and examine for damage and corrosion. Replace or repair as required.
7. Clean and examine the Transom Seal Clamp [4] for damage and corrosion. Replace as required.

ALUMINIUM HULLS

Drawing HJ-273-08-002 (for Aluminium Hull) refers.

To remove the Transom Seal Clamp [4] and replace the Transom Seal [5], carry out the following operation:

1. Remove the Reverse Duct as shown in **Section 8.4.1. Reverse Duct Removal.**
2. Slacken the two securing Nuts on the Transom Seal Clamp and remove, taking care not to lose the Transom Seal Clamp Filler Piece [1] fitted between the Transom Seal and the Transom Seal Clamp at the bottom of the Transom Seal Clamp.
3. Slacken and remove the Transom Plate attachment Screws [9], 2 Flat Washers [12] (located on either side of the Transom Plate and the Transom), Spring Washers [14] and Nut [10].

NOTE:

The Transom Plate [3] is manufactured in two pieces to assist the fitting and removal.

4. Remove the Transom Plate.

5. Remove the Transom Seal [5] from around the Jet Unit and Transom and discard.
6. Clean off the Transom Plate [3] and the Transom and examine for damage and corrosion. Replace or repair as required.
7. Clean and examine the Transom Seal Clamp [4] for damage and corrosion. Replace as required.

8.6.2.Transom Seal Re-Fitting

GRP HULLS.

Drawing HJ-273-08-001 (for GRP Hull) refers.

1. With the Reverse Duct removed, **(Refer to Section 8.4.1. Reverse Duct Removal)** fit a new Transom Seal [5] over the Tailpipe and into position against the Transom.
2. Align the Screw Holes in the Transom Seal with the Screw holes in the Transom.
3. Fit the Transom Plate [3] up against the Transom Seal and locate with Screws [9], **ensuring that a Flat Washer [13] is fitted to the Screw prior to fitting**.

NOTE:

Ensure that Screws [9] are fitted with their Heads on the outside of the Transom.

4. From inside the Vessel, fit Flat Washer [13], Spring Washer [15] and Nut [11]. Torque load to the correct torque. **(Drawing 85113 refers).**
5. Fit the Transom Seal Clamp [4] over the Jet Unit Intake, ensuring that the Clamp is positioned correctly on the Transom Seal. **Refer to Drawing HJ-273-08-001. "Detail "C".**
6. With the Transom Seal Clamp correctly positioned, insert the Transom Seal Clamp Filler Piece [1] at the bottom of the Transom Seal Clamp, behind the Clamp Assembly securing boss.
7. Tighten the two Nuts on the Securing Clamp Boss to tighten the Transom Seal Securing Clamp evenly onto the Transom Seal [5].

ALUMINIUM HULLS.

Drawing HJ-273-08-002 (For GRP Hull) refers.

1. With the Reverse Duct removed, **(Refer to Section 8.4.1. Reverse Duct Removal)** fit a new Transom Seal [5] over the Tailpipe and into position against the Transom.
2. Align the Screw Holes in the Transom Seal with the Screw holes in the Transom.
3. Fit the Transom Plate [3] up against the Transom Seal and locate with Screws [9], **ensuring that a Flat Washer [12] is fitted to the Screw prior to fitting**.

NOTE:

Ensure that Screws [9] are fitted with their Heads on the outside of the Transom.

4. From inside the Vessel, fit Flat Washer [12], Spring Washer [14] and Nut [10] to the Screw [9] and torque load to the correct torque. **(Drawing 85113 refers).**
5. Fit the Transom Seal Clamp [4] over the Jet Unit Intake, ensuring that the Clamp is positioned correctly on the Transom Seal. **Refer to Drawing HJ-273-08-002, Detail "C".**
6. With the Transom Seal Clamp correctly positioned, insert the Transom Seal Clamp Filler Piece [1] at the bottom of the Transom Seal Clamp, behind the Clamp Assembly securing boss.
7. Tighten the two Nuts on the Securing Clamp Boss to tighten the Transom Seal Securing Clamp evenly onto the Transom Seal [5].

8.7. TAILPIPE AREA - OVERHAUL

If The Reverse Duct has not already been removed, it must be removed before proceeding. **Refer to Section 8.4.1. Reverse Duct Removal.**

If the Steering Linkages have not already been disconnected, they must be disconnected before proceeding. **Refer to Section 8.5. "Steering Assembly - Overhaul".**

8.7.1.Impeller - Checking for Wear

CHECKING FOR WEAR:

Before dismantling the Tailpipe end of the Jet, remove the Inspection Cover (19) (or Intake Screen (7) if in dry dock) and carry out the following checks :

1. **Impeller Tip Wear Check:**
Using feeler gauges, check clearance between the tips of the Impeller Blades and the Wear Ring (3) at each side of the Jet Unit **(i.e. not top and bottom). Maximum recommended worn clearance is 1.0mm (.040") per side.**

2. **Water Bearing Wear Check:**
Push the Mainshaft (8) hard from side to side. Check total sideways movement at the Impeller Blade tips. **Maximum recommended total worn movement is 0.6mm (.024 ins).** This indicates the amount of wear in the Rubber Water Bearing (17) and Shaft Sleeve (13).

8.7.2.Tailpipe Area - Dismantling

Drawings HJ-273-01-001 and HJ-273-06-001 refer.

DISMANTLING:

Drawing HJ-273-06-001 refers.

If the Tailpipe is being removed complete proceed as follows, otherwise refer to **Section 8.5.4. Nozzle / Nozzle Housing Removal.**

1. Disconnect the Steering Tiller [19] from the Steering Control Cable or Steering Cylinder (If fitted).
2. Check the Steering Shaft for:-
   a) Freedom of movement
   b) Excessive wear in Bushes [21] and [23].
   c) Worn or damaged Scraper [20] and Seal [22].
   d) Excessive wear in the ball end of the Steering Crank [15].
3. Replace Steering Bushes and Seals if damaged or worn. **(See Section 8.5.4. Nozzle / Nozzle Housing Removal, for details on Nozzle Bush replacement).**
4. To remove the Steering Crank [15], remove Nut [13], Spring Washer [14] and Washer [17] from the Cotter [21] and remove Cotter from the Steering Crank.
5. Push the Steering Shaft [18] forwards and slide the Steering Crank off the end of the Steering Shaft.
6. Remove the Steering Shaft completely from Bushes [23] and [21].
7. Remove the Steering Crank from the Steering Crank Bush [3].
8. Rotate the Nozzle [1] through its full arc of travel, to check for stiffness or slack in Bushes [5]. If these are in good condition, the Nozzle and Tailpipe can be removed complete.
9. Should the Nozzle require removal, **refer to Section 8.5.4. Nozzle / Nozzle Housing Removal.**

Drawing HJ-273-01-001 refers.

10. Remove the 4 x M16 Nuts [54] and Spring Washers [57] from the Tailpipe Upper Studs [48] and Lower Studs [49].
11. Hit the Tailpipe sideways with the heel of the hand or a rubber mallet to free the joint and remove the Tailpipe from the Jet Unit.
12. Prevent Coupling from turning and unscrew the Impeller Nut [14].

NOTE:

If the Impeller Nut is stiff to remove, apply gentle heat on the Nut.

13. Withdraw the Shaft Sleeve [13] from between the Impeller and the Mainshaft.
14. Withdraw the Impeller off the Mainshaft.
15. Remove Impeller Key [14] from the Mainshaft.
16. Examine the Wear Ring [1] for wear, pitting and score damage. In the unlikely event of this being very badly scored, or if the Wear Ring has swollen inwards, it should be replaced. If possible, request your local agent to carry out the replacement of the Wear Ring.

8.7.3. Wear Ring - Replacement

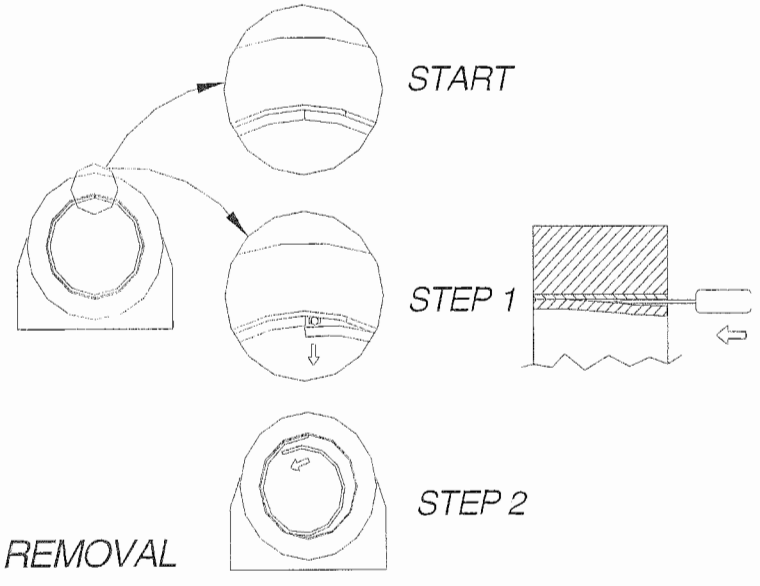

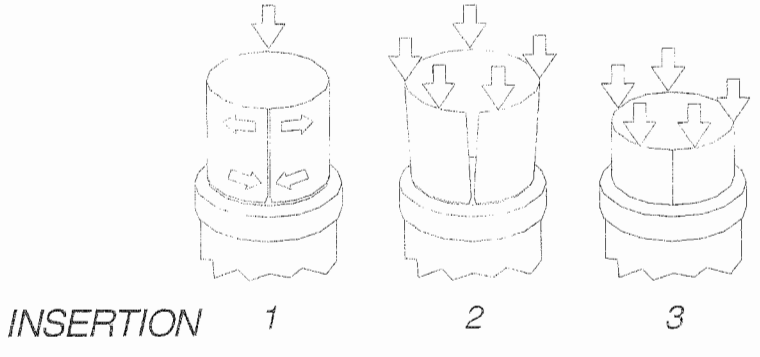

REMOVING THE OLD WEAR RING AND INSULATOR:

Drawing HJ-273-01-001 refers.

Step 1:

1. Find the joint in the Wear Ring [3] and force a long thin screw driver between the Wear Ring [3] and the Insulator [4], adjacent to the Wear Ring joint, until the end of the Wear Ring is free **(See Step 1 in Diagram on previous page).**

Step 2:

2. Pull the free end of the Wear Ring inwards and remove it from the Intake **(See Step 2 in Diagram on previous page).**
3. Remove the Wear Ring Insulator [4] and thoroughly clean and degrease the Intake Bore.

FITTING A NEW INSULATOR:

1. Paint the recess in the Intake Bore with a thin layer of two pot zinc chromate etch primer and allow to dry. **(Alternatively Zinc Phosphate may be used).**
2. Apply a coat of zinc chromate primer and allow to dry.
3. Paint a second coat of zinc chromate primer.
4. While the zinc chromate primer is still wet, fit in a new Insulator [4] to the Intake, ensuring the Insulator is in contact with the primer over the whole surface.

FITTING A NEW WEAR RING:

NOTE:

Because of variations in paint and grease thickness the Wear Ring may not fit without some "dress" filing of the mating ends to reduce the circumference slightly. DO NOT REMOVE TOO MUCH METAL - the Wear Ring must be a tight fit in the Insulator to remain in the correct position.

1. Smear the whole Insulator surface with a thin layer of grease or oil.

Step 1:

2. Take a new Wear Ring [3] and with the chamfer end leading, butt the strip at the chamfers by twisting slightly, (this reduces the lead in diameter) and gradually feed it inside the Insulator [4] fitted in the Intake until it butts fully.
3. Slide the Wear Ring in evenly as far as possible by hand.

Step 2:

4. Place a heavy steel plate against the edge of the Wear Ring (The plate is used to prevent damage to the end of the Wear Ring and should cover whole diameter of Wear Ring).
5. Drive the Wear Ring evenly into the Intake recess by hitting the plate with a large hammer.
6. Continue pushing the Wear Ring into the Intake until the Wear Ring sits approximately **0.8 mm ($^1/_{32}$")** from the end of the recess in the Intake. **(Refer to Diagram 1 Wear Ring Position).**
7. The Wear Ring must not touch any part of the Jet Unit except the Insulator.
8. The Wear Ring is correctly fitted when it sits flush with the inner end of the Intake Flange.

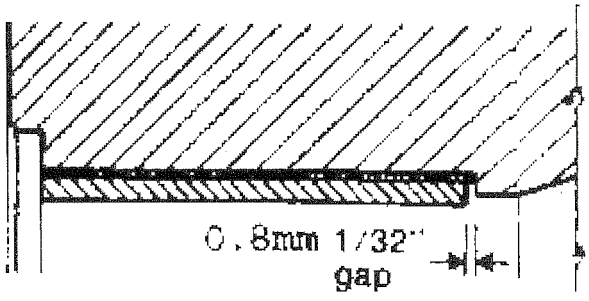

DIAGRAM 1 WEAR RING FITTING POSITION

NOTE:

The Wear Ring is in the correct position when it is located approximately 0.8 mm ($^1/_{32}$") from the end of the recess in the Intake (Diagram 1) and the Wear Ring sits flush with the rearward face of the Intake. This gap must be maintained to prevent electrical contact between the Wear Ring and the Tailpipe / Intake of the Jet Unit.

9. On completion of the fitting of the Wear Ring. Electrical insulation between the Wear Ring and the Intake Casting should be checked, using a multimeter. The resistance reading should be over 1000 ohms.

8.7.4.Impeller Overhaul

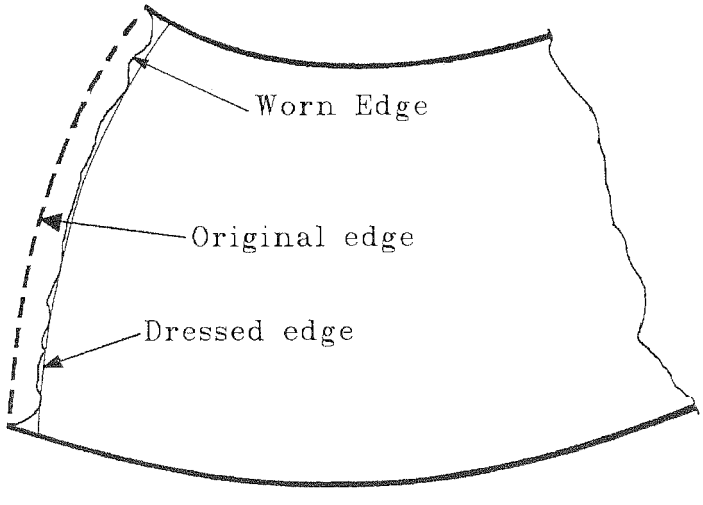

FRONT VIEW OF IMPELLER BLADE

CORROSION OR EROSION DAMAGE

Inspect all surfaces of the impeller for any sign of corrosion or erosion damage. Damaged areas should be weld repaired and dressed back to a smooth surface. **The contour details given on Drawing HJ-273-03-001 should be followed.**

WELDING

CAUTION:

Avoid using excessive heat during welding.

Impellers are stainless steel type CF8M conforming to ASTM A 743 or 316 to BS 3100. Filler metal should have chemical analysis similar to AISI 316L (Carbon content less than 3%) Post weld heat treatment is not required.

BENT BLADES

The outer corners of a blade may be bent if the Impeller has been dropped or mishandled. Bent or dented blades may be straightened using a large adjustable spanner or other suitable tools. Bring the blade back to it's original smooth profile checking against undamaged blades.

LEADING & TRAILING EDGE DAMAGE

Check the Impeller leading and trailing edges for damage. Excessively worn or blunt leading edges may be built up by welding. Sharpen the edges as shown on the drawing. Blunt impellers cause loss of performance and cavitation.

BLADE SHARPENING PROCEDURE

The drawing shows the main points involved in blade sharpening. Use the following notes as well:

1. Dress the edge back to a smooth curve removing the minimum amount of metal.
2. Dress both faces of the blade taking slightly more metal off the rear side until the leading edge is 2 mm thick all along.
3. Blend well back into the original blade surface.
4. Both front and rear surfaces are to be a smooth uniform curve with no sudden bumps or change in direction.
5. Grind or file a smooth 1 mm radius along the leading edge.

IMPELLER OUTSIDE DIAMETER (O.D.) MODIFICATIONS

1. If the Impeller OD is excessively worn it may be built up by welding. After welding turn on a mandrel to the correct OD. Use light cuts to avoid blade distortion.
2. Turn the outside diameter to **268.8 - 269.0 (10.591" - 10.593")** making sure that it is concentric with the bore. (Light cuts should be taken when turning outside diameter to avoid deformation of the Impeller Blades).
3. File and polish.
4. Balance the Impeller statically, preferably on the Mainshaft with the Coupling and all keys in place. Balance to within 45 gm-cm (0.63 oz/ins).

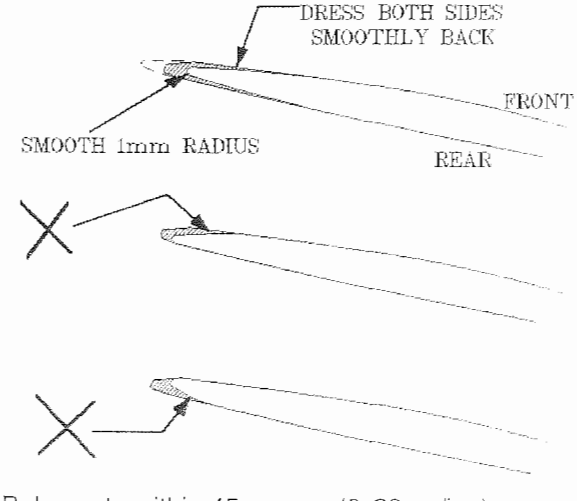

8.7.5.Tail Pipe and Nozzle: Re-Assembly

Drawing HJ-273-06-001 refers.

NOZZLE BUSHES - REPLACEMENT:

Ensure that all worn or damaged Steering and Reverse System Bushes, Scrapers and Seals have been replaced prior to re assembly of the Tailpipe and Nozzle. **Refer to Section 8.5.3 "Steering Assembly Removal" and Section 8.5.4. "Nozzle / Nozzle Housing Removal".**

RE-ASSEMBLY:

Drawing HJ-273-01-001 refers.

Refer to specified minimum torque values shown in Section 6.6 and on Drawing 85113 when tightening all nuts.

1. Check the Water Bearing [17] and Shaft Sleeve [13] for wear or bad scoring and if necessary replace. **(refer to Section 6.4. Item 11.c.)** Replace automatically if the Impeller has just been built up and the Wear Ring replaced.
2. Use either an internal extractor to pull the Water Bearing [17] from the Tailpipe, or place the Tailpipe under a press and press out the Water Bearing [17] and Tailpipe Fairing [15] together.
3. When refitting the tailpipe Fairing, use "Loctite 680" or equivalent.
4. Apply grease to the Tailpipe bore before inserting a new Water Bearing but **ensure that grease is kept away from the Rubber Bearing surfaces.**
5. When pressing in the new Water Bearing, use a wooden block under the nose of the Tailpipe Fairing to take the load.
6. Smear a light coating of grease over complete Mainshaft.
7. Insert the Impeller Key [11] with chamfers facing down into the Mainshaft keyway.
8. Slide the Impeller onto the Mainshaft [8] followed by the Shaft Sleeve [13].
9. Apply "Loctite 243" or equivalent to the threads at the rear end of the Mainshaft [8] (Impeller Nut end).
10. **Fit the Impeller Nut [14] and torque load to 230 Nm (170 lbs/ft).**
11. Dust the Water Bearing [17] with Talcum Powder or French Chalk.
12. Clean and grease the Tailpipe / Intake contact faces.
13. Refit the Intake / Tailpipe Seal [16] and replace the Tailpipe.
14. Refit the 4 x Spring Washers [57] and M16 Nuts [54] to the Tailpipe Upper Studs [48] and Lower Studs [49].
15. Torque load to the correct torque.
16. Turn the Mainshaft to ensure that the assembly will rotate.

CONVERSION CHART

TORQUE

1 pound foot = 1.3558 newton metres

1 newton metre = 0.7375 pounds foot.

DISTANCE

1 inch = 2.54 centimetres
1 foot = 0.3048 metre
1 mile =1.609 kilometres
1 nautical mile = 1.8532 kilometre

1 millimetre = 0.03937 inches
1 metre = 3.2808 feet

1 kilometre = 0.6214 mile
1 kilometre = 0.539 nautical mile

SURFACE or AREA

1 square inch = 6.4516 square centimetres
1 square foot = 929.03 square centimetres

1 square centimetre = 0.1550 square inch
1 square metre = 10 .76 square feet

POWER

Horsepower
1 Horsepower = 0.7457 Kilowatts
1 Horsepower (Metric) = 0.7355 Kilowatts

Kilowatts
1 Kilowatt = 1.341 Horsepower
1 Kilowatt = 1.3596 Metric Horsepower

FORCE

I kilonewton = 224.86 pounds force

1 pound force = 4.448 newtons

WEIGHT

1 ounce = 28.35 grams
1 pound = 0.4536 Kilograms

1 gram = 0.0353 ounce
1 kilogram = 2.205 pounds
1 Tonne = 2205 pounds

TEMPERATURE

Farenheit	Celsius
248 °F	120 °C
212	100
176	80
140	60
104	40
95	35
86	30
77	25
68	20
59	15
50	10
41	5
32	0

LIQUID MEASURE (IMPERIAL)

1 pint = 0.5506 litre
1 gallon = 4.546 litres
1 (UK) gallon = 1.201 (US) gallon
1 litre = 0.2199 (UK) gallons

LIQUID MEASURE (U.S.)

1 pint = 0.473 litre
1 gallon = 3.785 litres

Fahrenheit to Celsius:
Subtract 32, then multiply by $^{5}/_{9}$.

Celsius to Fahrenheit:
Multiply by $^{9}/_{5}$, then add 32

SPEED

1 mile per hour = 0.8690 knots
1 kilometre per hour = 0.5396 knots
1 knot = 1.8532 kilometres per hour

1 mile per hour = 1.609 kilometres per hour
1 kilometre per hour = 0.621 miles per hour
1 knot = 1.151 miles per hour

PRESSURE

1 pound /inch ^{2} = 0.0689 bar
1 pound / foot ^{2} = 4.8824 kilogram / metre ^{2}
1 pound /inch ^{2} = 6.895 Kilopascal
1 Newton / millimetre^2 = 145.04 pounds/square inch

1 bar = 14.5038 pound / inch ^{2}
1 kilogram / metre ^{2} = 0.2048 pound / foot^2
1 Kilopascal = 0.145 pound /inch ^{2}
1 bar = 100 Kilopascal

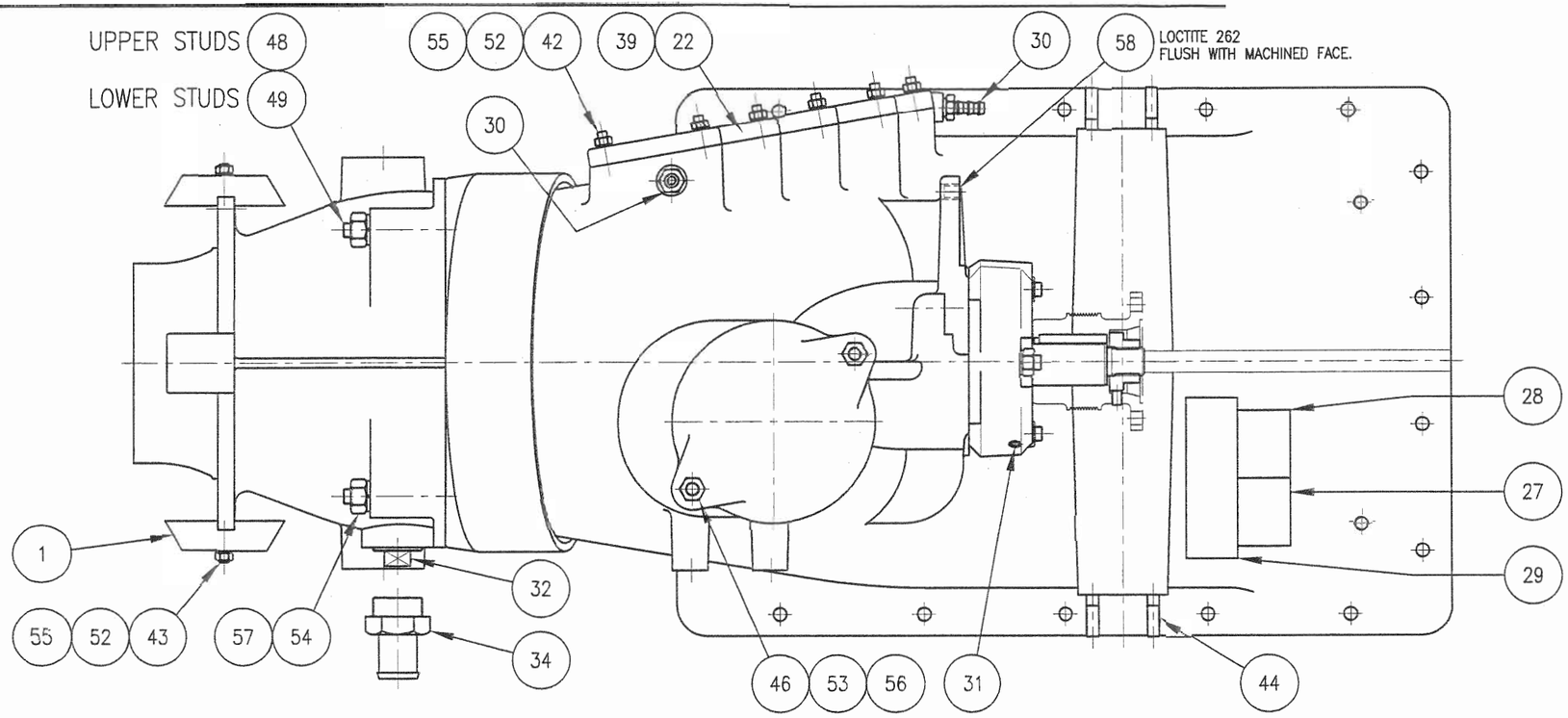

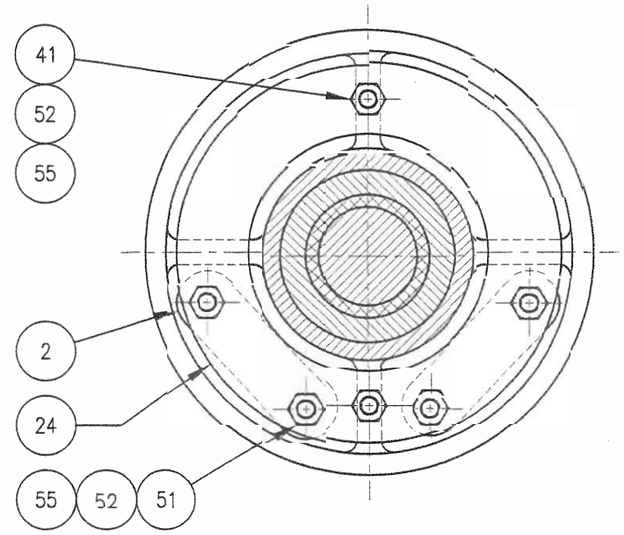

SECTION THRU MAINSHAFT SHOWING
INTERNAL ANODE MOUNTING PLATE

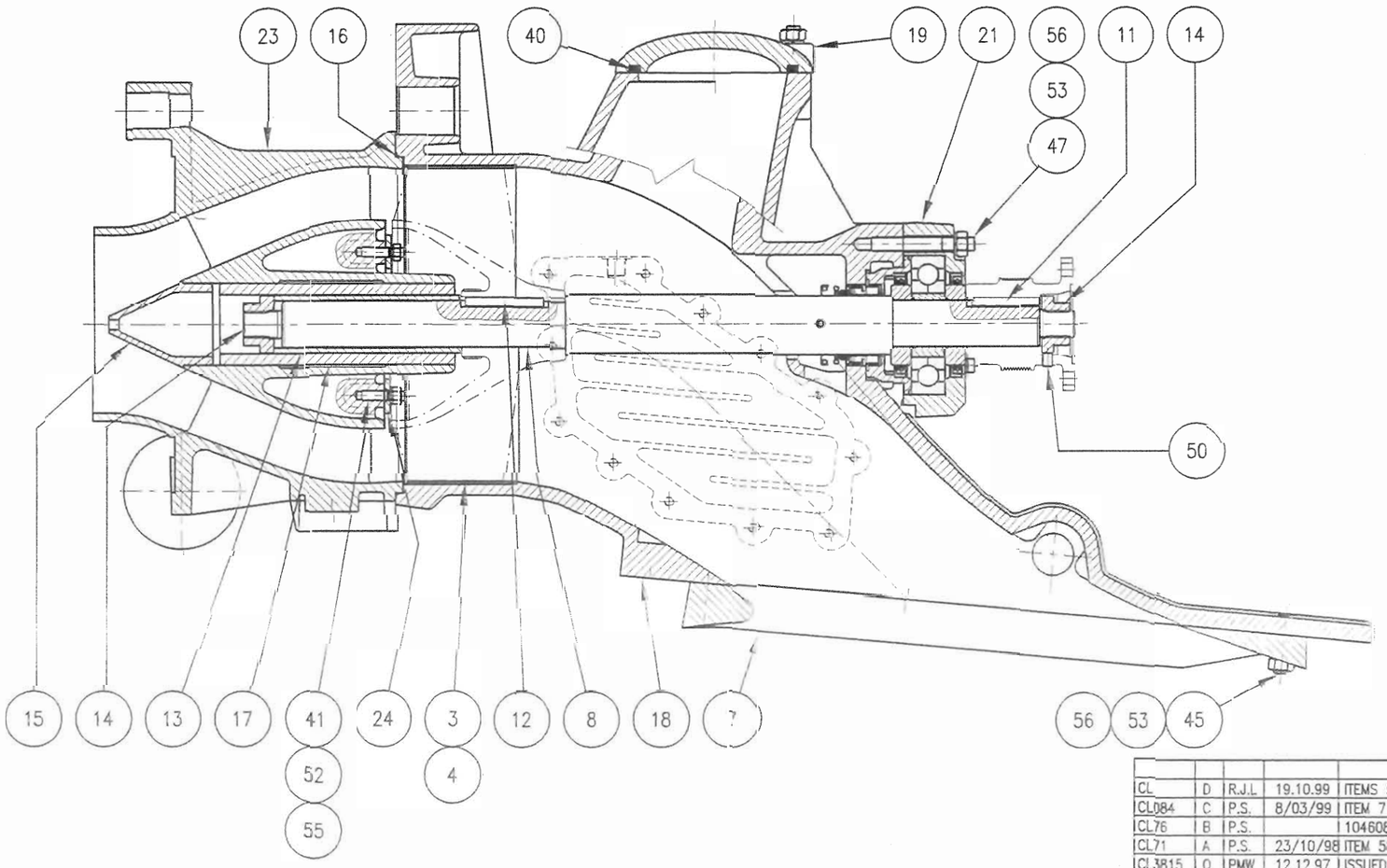

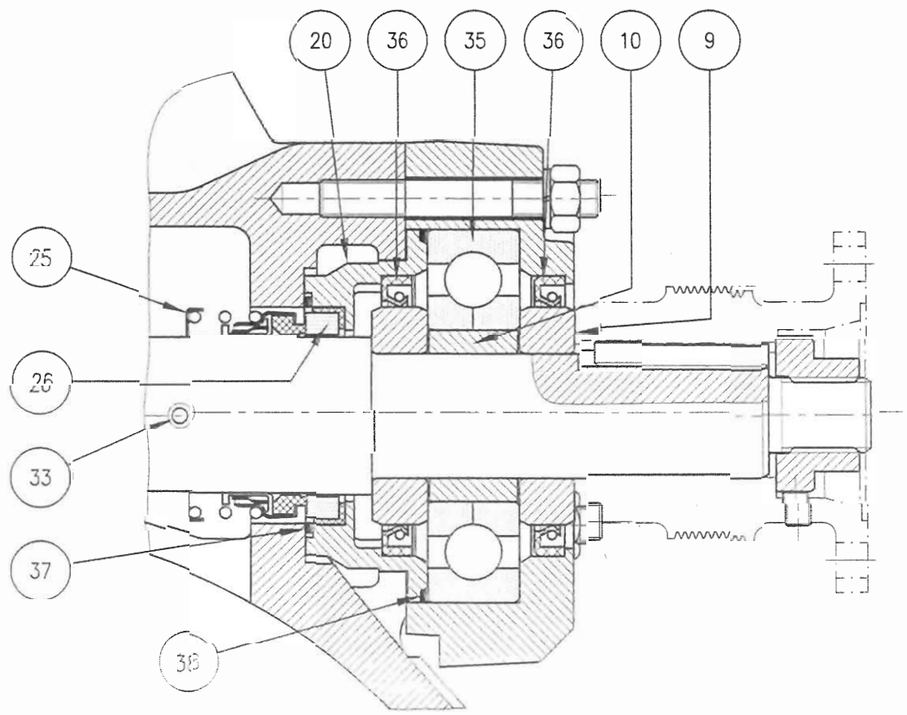

ENLARGED VIEW OF BEARING HOUSING

REF	NO.	BY	DATE	AMENDMENTS
CL	D	R.J.L	19.10.99	ITEMS 52 & 55 A12 QTY ADDED.
CL084	C	P.S.	8/03/99	ITEM 7 REMOVED FROM INTAKE SPARES KIT.
CL76	B	P.S.		104608 & 104755 ADDED.
CL71	A	P.S.	23/10/98	ITEM 58 ADDED.
CL3815	0	PMW	12.12.97	ISSUED FOR PRODUCTION

JET 273

THIS PRINT IS PROVIDED ON A RESTRICTED BASIS AND IS NOT TO BE USED IN ANY WAY DETRIMENTAL TO THE INTERESTS OF C.W.F.HAMILTON AND CO LTD.

C.W.F.HAMILTON & CO. LTD. CHCH. NZ.

PROJECTION

NAME
BASIC JET ASSEMBLY
HJ 273 JET
SHEET 1 OF 2 SHEETS

DESIGNED | DATE
DRAWN P.M.W. | 7.11.97
CHECKED
APPROVED
NAME

SCALE 1:1 | No. IASSY-HJ273 01001 | D

A	B	C	D	Item	Kit	PartNumber	Qty	ProductDescription	DrawingNbr
					A	109792		INTAKE KIT SERIAL # *** ON	HJ27301001
					B	109793		TAILPIPE KIT SERIAL # *** ON	HJ27301001
					C	109794		BEARING HOUSING KIT SERIAL # *** ON	HJ27301001
					D	105288		COUNTERFACE HOUSING ASSEMBLY (PAC SEAL)	105288
	B				REF	104755	1	STEERING SHAFT BUSH	104755
	B				REF	104608	2	THREADED BUSH (REV DUCT PIVOT PIN)	104608
	B			1		102185	2	ANODE	102185
	B			2		103359	2	ANODE MK3	103359
A				3		103362	1	WEAR RING	102726
A				4		103363	1	INSULATOR (WEAR RING)	102727
				5		105135	1	(JET) PACKAGING CRATE	105135
	B			6		105273-2	1	STONE BAR	105273
				7		105276	1	SCREEN (ALM) (std)	105276
				8		105278	1	MAINSHAFT	105278
		C		9		105279	2	SEAL SLEEVE	105279
		C		10		105280	1	BEARING CARRIER	105280
				11		105283-1	1	COUPLING KEY	105283
				12		105283-2	1	IMPELLER KEY	105283
				13		105285	1	WATER BEARING SLEEVE (REPLACED BY 111119)	105285
				14		105286	2	IMPELLER/COUPLING NUT	105286
	B			15		105287	1	TAILPIPE FAIRING	105287
	B			16		105360	1	(JET) O RINGS SPECIAL 1.8mm x 289mm X 292.6mm TAILPIPE SEAL	105360
	B			17		106264	1	MARINE WATER BEARING 70x50x200	106264
A				18		106404	1	INTAKE	106404
				19		106439	1	INSPECTION COVER	106439
			D	20		108343	1	COUNTERFACE HOUSING (PAC SEAL)	108343
		C		21		108932	1	BEARING HOUSING	108932
A				22		109194	1	OIL COOLER COVER PLATE	109194
	B			23		109701	1	TAILPIPE (JT TYPE STEERING) OBSOLETE 109701 - REPLACED BY 111139+111138	109701
	B			24		109943	1	ANODE MOUNTING PLATE	109943
				25		61363	1	(JET) ROTARY SEALS (PAC SEAL) # 00-200001	61485
			D	26		61486	1	(JET) ROTARY SEALS (PAC SEAL) #08-1459	61485
A				27		63097	1	(LABELS) (MODEL & SERIAL No PLATE)	63097
A				28		63135	1	(LABELS) (PATENT PLATE)	63135
A				29		63610	1	(LABELS) (WARNING PLATE)	63610
A				30		68000	2	3/8 BSP PUSHLOCK FITTING MALE (SA 062 20 606)	N/A
		C		31		HEIDAAA	1	(GREASE) NIPPLES (H29) 1/8"BSP	N/A
	B			32		HIQUAAG	1	(PLUGS) B.S.P.P. PLUG 1-1/4" BSP SQ HD 316 S.S.	N/A
				33		HUILABD	1	(SPLIT PINS) ST ST 316 0.19"x2.50"	N/A
	B			34		JMNGAAO	1	(HOSE) TAILS CP30 BRASS 1-1/4" BSP	N/A
		C		35		JNODAFB	1	(SKF) BEARINGS ALL TYPES (SKF QJ311MA)	N/A
		C		36		JWKZACA	2	(OIL SEALS) Gaco DPSM709010 C/W SS SPRING	N/A
				37		HMHRABH	1	(O RINGS) IMPERIAL 0.13x2.75x3.00 (232N70)	N/A
				38		HMHRABV	1	(O RINGS) IMPERIAL 0.13x4.50x4.75 (246N70)	N/A
A				39		HMHRAEN	1	(O RINGS) IMPERIAL 0.13x9.00x9.25 (270N70)	N/A
				40		HMHRADQ	1	(O RINGS) IMPERIAL 0.25x5.25x5.75 (431N70)	N/A
	B			41		JCQHXAG	2	(STUDS) METRIC (316-STST) M8x35	30647
A				42		JCQHXAH	12	(STUDS) METRIC (316-STST) M8x40	30647
	B			43		30661	2	(STUDS) METRIC (316-STST) M8x51	30647
A				44		JCQHXAO	4	(STUDS) METRIC (316-STST) M10x50	30637
A				45		JCQHXAU	4	(STUDS) METRIC (316-STST) M12x50	30639
A				46		103916	2	(STUDS) METRIC (316-STST) M12x64	30639
A				47		103927	3	(STUDS) METRIC (316-STST) M12x90	30639
A				48		102286	2	(STUDS) METRIC (316-STST) M16x117	30634
A				49		106364	2	(STUDS) METRIC (SAF-2205) M16x147	30700
				50		JAJMYBR	1	(SCREWS) (SET SCREW) (ZP) M8x12	N/A
	B			51		HYQHXCB	4	(BOLTS) (METRIC) ST ST 316 M8x45	N/A
A12	B8			52		JDQHXAC	20	(NUTS) (METRIC ST ST 316) M8	N/A
				53		JDQHXAH	9	(NUTS) (METRIC ST ST 316) M12	N/A
				54		JDQHXAL	4	(NUTS) (METRIC ST ST 316) M16	N/A
A12	B8			55		JEQKXAC	20	(WASHERS) (SPRING) METRIC ST ST 316 M8	N/A
				56		JEQKXAH	9	(WASHERS) (SPRING) METRIC ST ST 316 M12	N/A
				57		JEQKXAJ	4	(WASHERS) (SPRING) METRIC ST ST 316 M16	N/A
A				58		110806	1	SLEEVE FOR SAGINAW PUMP MOUNT	110806

REF	NO.	BY	DATE	AMENDMENTS
				SEE SHEET 1 FOR AMENDMENTS.
JET 273				

C.W.F.HAMILTON & CO. LTD. CHCH. NZ.

PROJECTION

NAME: BASIC JET ASSEMBLY
HJ 273 JET
SHEET 2 OF 2 SHEETS

DESIGNED | DATE
DRAWN: P.M.W. | 7.11.97
CHECKED
APPROVED: IKME

SCALE: - | No. ASSY—HJ273 01001 | D

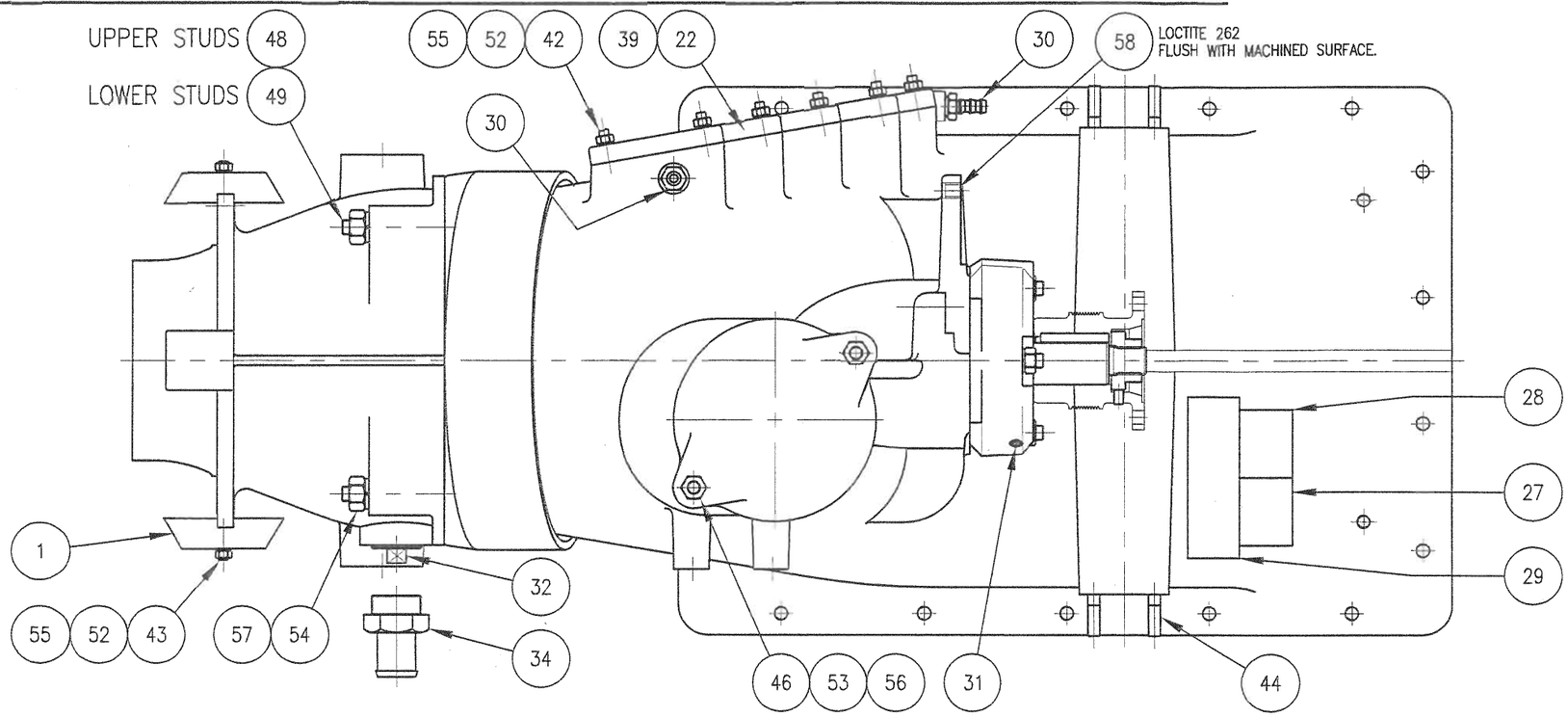

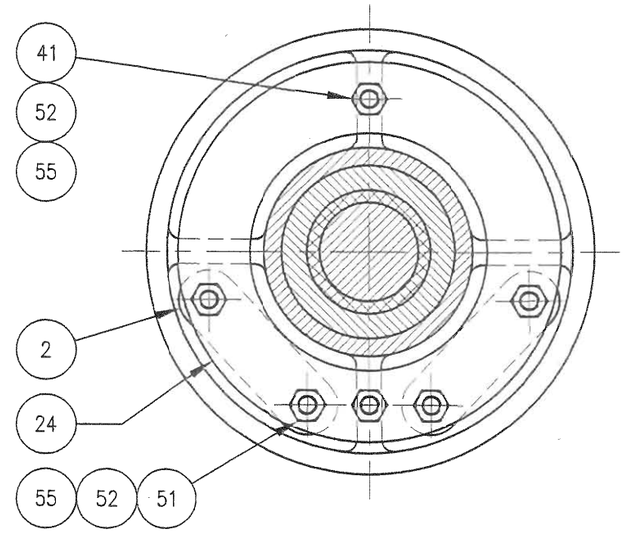

SECTION THRU MAINSHAFT SHOWING INTERNAL ANODE MOUNTING PLATE

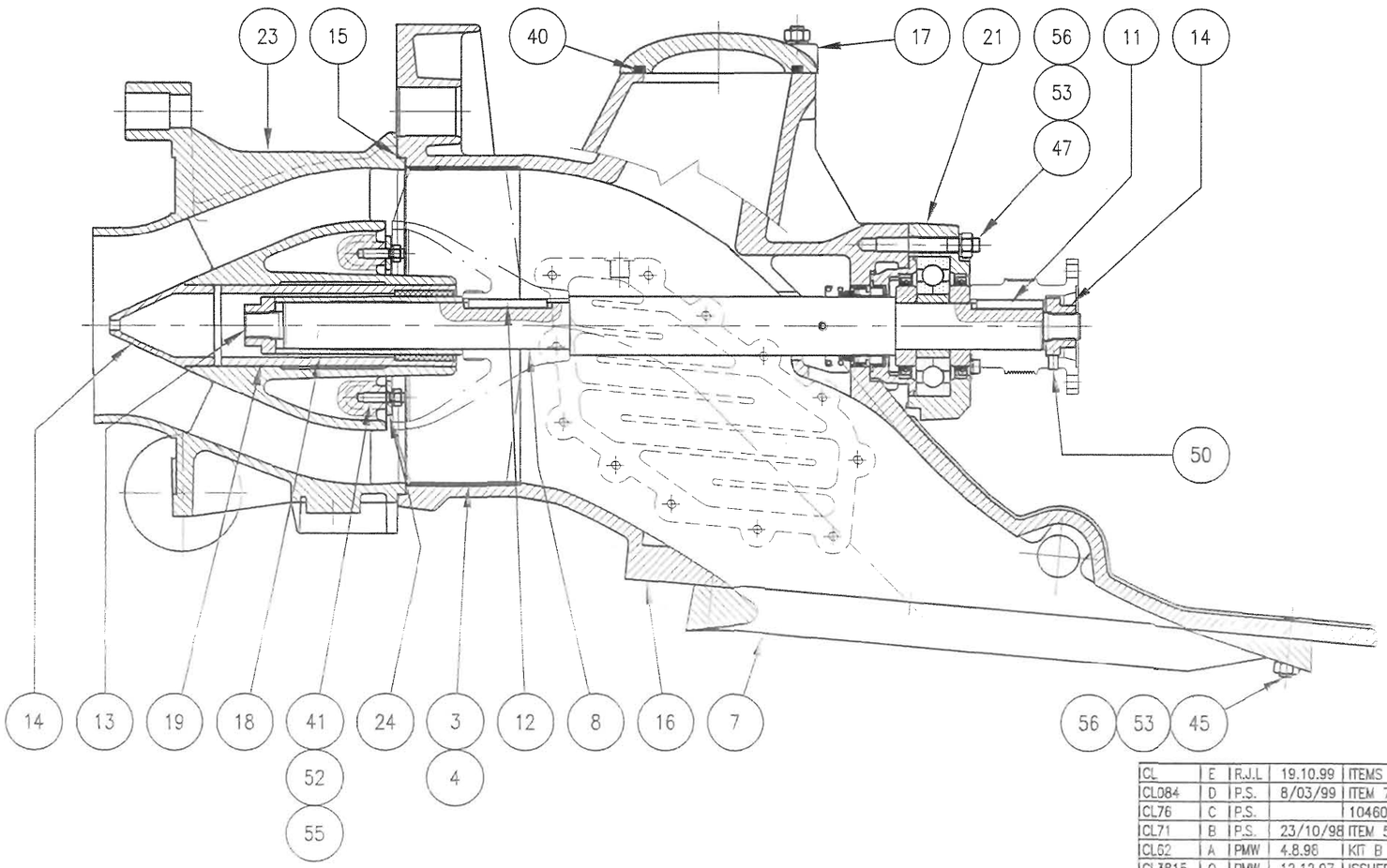

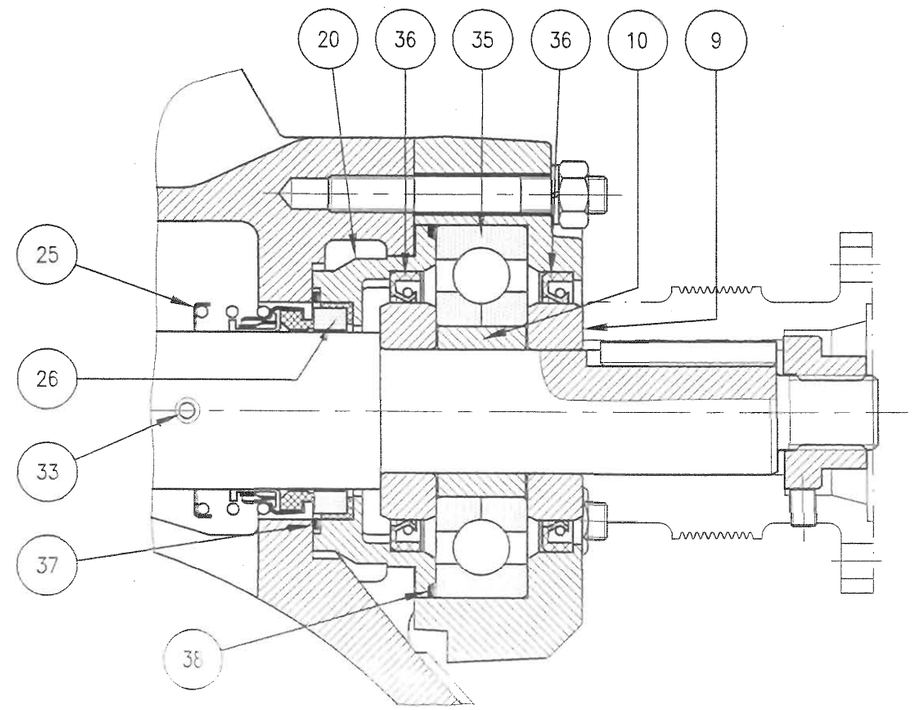

ENLARGED VIEW OF BEARING HOUSING

REF	NO.	BY	DATE	AMENDMENTS
CL	E	R.J.L	19.10.99	ITEMS 52 & 55 QTY. A12 ADDED.
CL084	D	P.S.	8/03/99	ITEM 7 REMOVED FROM ITAKE SPARES KIT.
CL76	C	P.S.		104608 & 104755 ADDED.
CL71	B	P.S.	23/10/98	ITEM 58 ADDED.
CL62	A	PMW	4.8.98	KIT B WAS PART No: 109793 INCORRECT.
CL3815	0	PMW	12.12.97	ISSUED FOR PRODUCTION
JET 273				

C.W.F.HAMILTON & CO. LTD. CHCH. NZ.

PROJECTION

DESIGNED | DATE

DRAWN P.M.W. | 12.11.97

CHECKED

APPROVED

NAME
BASIC JET
DRY RUN ASSEMBLY
HJ 273 JET
SHEET 1 OF 2.

SCALE 1:1 | No. ASSY-HJ273 01 002 | E

A	B	C	D	E	Item	Kit	PartNumber	Qty	ProductDescription	DrawingNbr
						A	109792		INTAKE KIT SERIAL # *** ON	HJ27301001
						B	110732		TAILPIPE KIT (DRY RUN ASSEMBLY)	HJ27301004
						C	109794		BEARING HOUSING KIT SERIAL # *** ON	HJ27301001
						D	105288		COUNTERFACE HOUSING ASSEMBLY (PAC SEAL)	105288
						E	110337		DRY RUN KIT	HJ27301004
	B				1		102185	2	ANODE	102185
	B				2		103359	2	ANODE MK3	103359
A					3		103362	1	WEAR RING	102726
A					4		103363	1	INSULATOR (WEAR RING)	102727
					5		105135	1	(JET) PACKAGING CRATE	105135
	B				6		105273-2	1	STONE BAR	105273
A					7		105276	1	SCREEN (ALM) (std)	105276
					8		105278	1	MAINSHAFT	105278
		C			9		105279	2	SEAL SLEEVE	105279
		C			10		105280	1	BEARING CARRIER	105280
					11		105283-1	1	COUPLING KEY	105283
					12		105283-2	1	IMPELLER KEY	105283
					13		105286	2	IMPELLER/COUPLING NUT	105286
	B				14		105287	1	TAILPIPE FAIRING	105287
	B				15		105360	1	(JET) O RINGS SPECIAL 1.8mm x 289mm X 292.6mm TAILPIPE SEAL	105360
A					16		106404	1	INTAKE	106404
					17		106439	1	INSPECTION COVER	106439
				E	18		106603	1	HARDENED SLEEVE	106600
	B			E	19		106626	1	DRY RUN BEARING	106623
			D		20		108343	1	COUNTERFACE HOUSING (PAC SEAL)	108343
		C			21		108932	1	BEARING HOUSING	108932
A					22		109194	1	OIL COOLER COVER PLATE	109194
	B				23		109701	1	TAILPIPE (JT TYPE STEERING)	109701
	B				24		109943	1	ANODE MOUNTING PLATE	109943
				E	25		61363	1	(JET) ROTARY SEALS (PAC SEAL) # 00-200001	61485
			D	E	26		61486	1	(JET) ROTARY SEALS (PAC SEAL) #00-1459	61485
A					27		63097	1	(LABELS) NAME PLATES MODEL & SERIAL No PLATE	63097
A					28		63135	1	(LABELS) NAME PLATES PATENT PLATE	63135
A					29		63610	1	(LABELS) NAME PLATES WARNING PLATE	63610
A					30		68000	2	3/8 BSP PUSHLOCK FITTING MALE	N/A
		C			31		HEIDAAA	1	(GREASE) NIPPLES (H29) 1/8"BSP	N/A
	B				32		HIQUAAG	1	(PLUGS) B.S.P.P. PLUG 1-1/4" BSP SQ HD 316 S.S.	N/A
					33		HUILABD	1	(SPLIT PINS) ST ST 316 0.19"x2.50"	N/A
	B				34		JMNGAAO	1	(HOSE) TAILS CP30 BRASS 1-1/4" BSP	N/A
		C			35		JNODAFB	1	(SKF) BEARINGS ALL TYPES (SKF QJ311MA)	N/A
		C			36		JWKZACA	2	(OIL SEALS) Gaco DPSM709010 C/W SS SPRING	N/A
					37		HMHRABH	1	(O RINGS) IMPERIAL 0.13x2.75x3.00 (232N70)	N/A
					38		HMHRABV	1	(O RINGS) IMPERIAL 0.13x4.50x4.75 (246N70)	N/A
A					39		HMHRAEN	1	(O RINGS) IMPERIAL 0.13x9.00x9.25 (270N70)	N/A
					40		HMHRADQ	1	(O RINGS) IMPERIAL 0.25x5.25x5.75 (431N70)	N/A
	B				41		JCQHXAG	2	(STUDS) METRIC (316-STST) M8x35	30647
A					42		JCQHXAH	12	(STUDS) METRIC (316-STST) M8x40	30647
	B				43		30661	2	(STUDS) METRIC (316-STST) M8x51	30647
A					44		JCQHXAO	4	(STUDS) METRIC (316-STST) M10x50	30637
A					45		JCQHXAU	4	(STUDS) METRIC (316-STST) M12x50	30639
A					46		103916	2	(STUDS) METRIC (316-STST) M12x64	30639
A					47		103927	3	(STUDS) METRIC (316-STST) M12x90	30639
A					48		102286	2	(STUDS) METRIC (316-STST) M16x117	30634
A					49		106364	2	(STUDS) METRIC (SAF-2205) M16x142	30700
					50		JAJMYBR	1	(SCREWS) (CAP SCREWS) IMPERIAL ST ST 316 SET SCREW (ZP) M8x12	N/A
	B				51		HYQHXCB	4	(BOLTS) (METRIC) ST ST 316 M8x45	N/A
	B8				52		JDQHXAC	20	(NUTS) (METRIC ST ST 316) M8	N/A
					53		JDQHXAH	9	(NUTS) (METRIC ST ST 316) M12	N/A
					54		JDQHXAL	4	(NUTS) (METRIC ST ST 316) M16	N/A
	B8				55		JEQKXAC	20	(WASHERS) (SPRING) METRIC ST ST 316 M8	N/A
					56		JEQKXAH	9	(WASHERS) (SPRING) METRIC ST ST 316 M12	N/A
					57		JEQKXAJ	4	(WASHERS) (SPRING) METRIC ST ST 316 M16	N/A
A					58		110806	1	SLEEVE FOR SAGINAW PUMP MOUNT	110806

REF	NO.	BY	DATE	AMENDMENTS
				SEE SHEET 1 FOR AMENDMENTS.
JET 1273				

C.W.F.HAMILTON & CO. LTD. CHCH. NZ.

PROJECTION

DESIGNED | DATE

DRAWN P.M.W. | 12.11.97

CHECKED

APPROVED H.W.

NAME
BASIC JET
DRY RUN ASSEMBLY
HJ 273 JET
SHEET 2 OF 2.

SCALE -

No: ASSY-HJ273 01 004 | E

PROJECTION

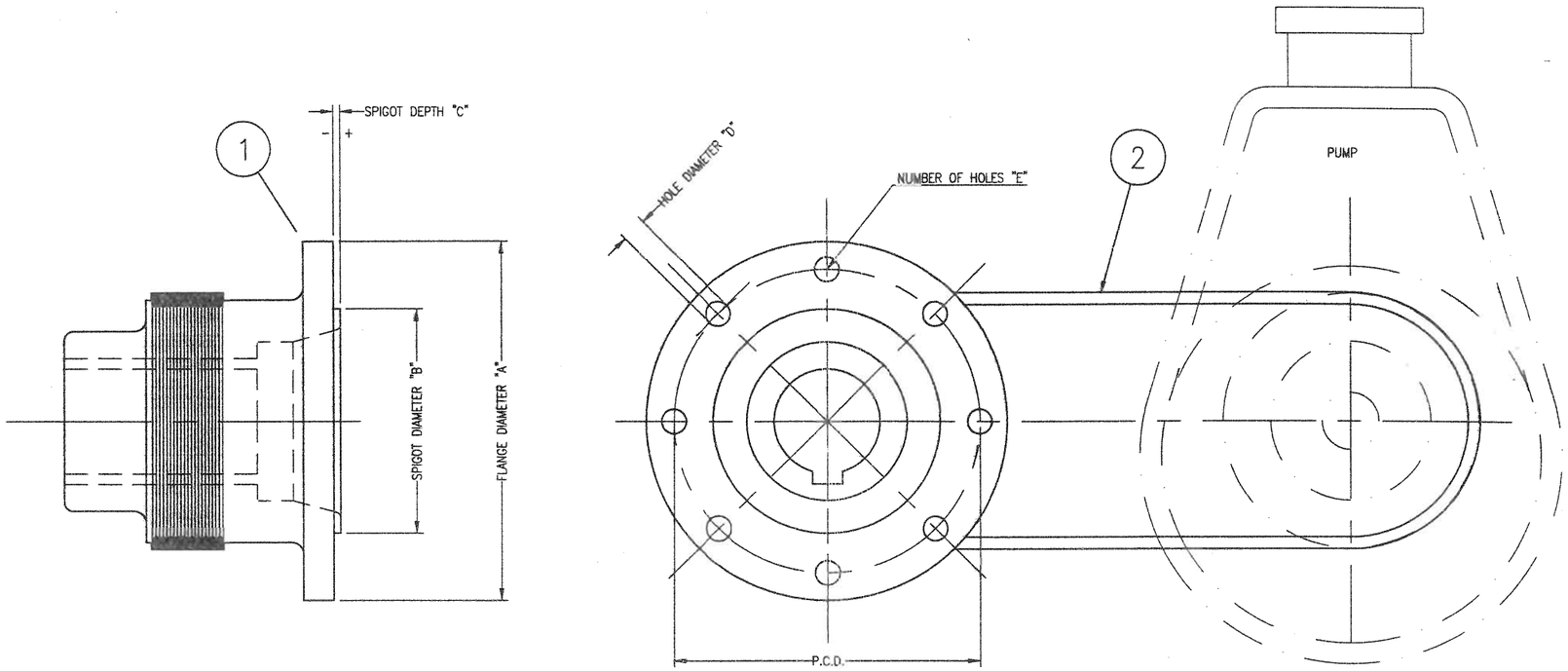

ITEM	SPARES ASSY No.	DESCRIPTION
A	109285	COUPLING & V-BELT ASSEMBLY (HJ273)
B	109216	COUPLING & V-BELT ASSEMBLY (HJ273)
C	109217	COUPLING & V-BELT ASSEMBLY (HJ273)
D	109218	COUPLING & V-BELT ASSEMBLY (HJ273)
E	109219	COUPLING & V-BELT ASSEMBLY (HJ273)

COUPLINGS & BELTS FOR HJ273

SPARES ASSY					ITEM	PART NO	QTY	DESCRIPTION	DRG NO CWF H. USE ONLY	DIAMETER "A"	DIAMETER "B"	DEPTH "C"	DIAMETER "D"	P.C.D.	HOLES "E"
A				4	1	108944	1	COUPLING FOR ELBE 0.112 SHAFT	108944	120	75	(+2.3/2.1)	8.2	101.5	8
B				4	1	108945	1	COUPLING FOR ELBE 0.113 SHAFT	108945	120	75	(+2.3/2.1)	10.2	101.5	8
C				4	1	108946	1	COUPLING FOR HARDY SPICER 1410	108946	116	69.9(recess)	(-2.0/1.8)	11.5	95.3	4*
D				4	1	108947	1	COUPLING FOR HARDY SPICER 1510 & 1550	108947	146	95.2(recess)	(-2.0/1.8)	11.5	120.6	4*
E				4	1	108948	1	COUPLING FOR SCATRA AQUA DRIVE 14200	108948	135	90(recess)	(-6.0)	M12X1.75-6H	108	6
A, B, C, D, E				1	2	64578	1	MICRO-V BELT. GATES 10 PJ 584							

*NOTE NOT E/SPACED SEE PART DRG.

A

HJ273 02 001

REF	NO.	BY	DATE	AMENDMENTS
CL3779	A	P.S.	11/3/97	108947 NOW INCLUDES 1550 OPTION
CL3760	0	P.S.	20/09/96	ISSUE FOR PRODUCTION

JET 273

C.W.F.HAMILTON & CO. LTD. CHCH. NZ.

MATERIAL N.A.

√ = N9 EXCEPT AS STATED

UNLIMITED DIMENSIONS TO BE ± -

MAT'L CERT

DESIGNED P.A.S. DATE 7/8/96

DRAWN P.A.S. 7/8/95

CHECKED

APPROVED K.V.E. 9/9/96

NAME COUPLINGS & BELTS HJ273

SCALE N.T.S.

No: A3-HJ273 02 001 A

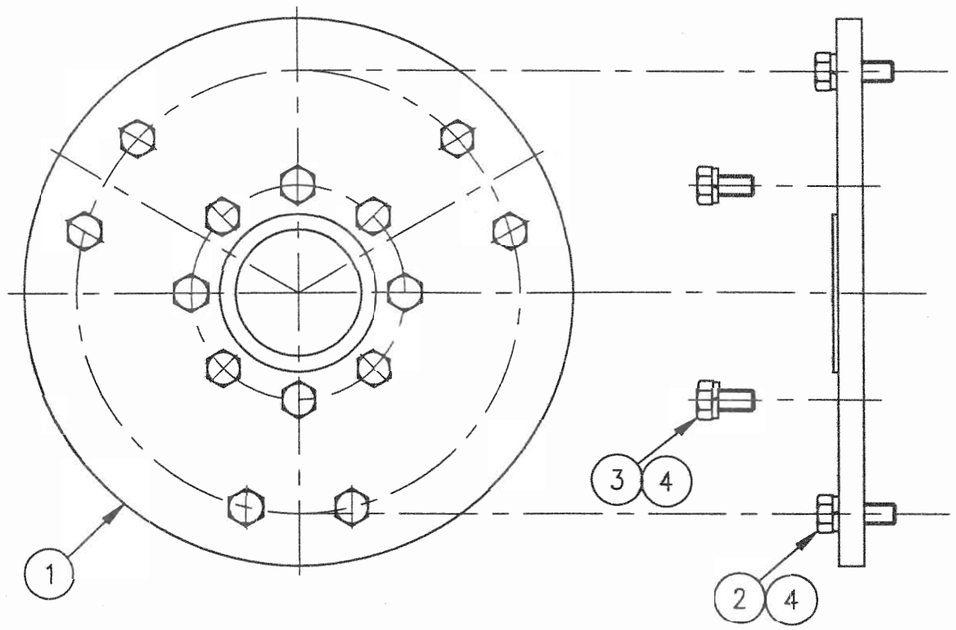

A	B	C	D	E	F	G	H	Code	Item	Kit	Part Nbr	Qty	ProductDescription	Drawing Nbr
										A	110408		ADAPTOR PLATE KIT for ISUZU UM4BCITC to 8 - dia10 HOLE X 120 FLANGE	HJ27302006
A								4	1		110407	1	ADAPTOR PLATE for ISUZU UM4BCITC to 8 - dia10 HOLE X 120 FLANGE	110407
A								4	2		HZQHXBU	6	HEX HEAD (M/C SCREW) M10x30	N/A
A								4	3		68005	8	M10 X 20 HEX MACHINE SCREW GR88 Z.P.	N/A
A								4	4		JEQKXAE	14	SPRING WASHER M10	N/A

REF	NO.	BY	DATE	AMENDMENTS
CL3818	0	P.S.	21/1/98	ISSUED FOR PRODUCTION.

JET 273

C.W.F.HAMILTON & CO. LTD. CHCH. NZ.

PROJECTION

NAME: FLYWHEEL ADAPTORS FOR HJ273 JET

		DATE
DESIGNED	P.A.S.	21/1/98
DRAWN	P.A.S.	21/1/98
CHECKED		
APPROVED		

SCALE

No: ASSY-HJ27302006 0

VIEW OF BLADE FROM FRONT OF BOAT

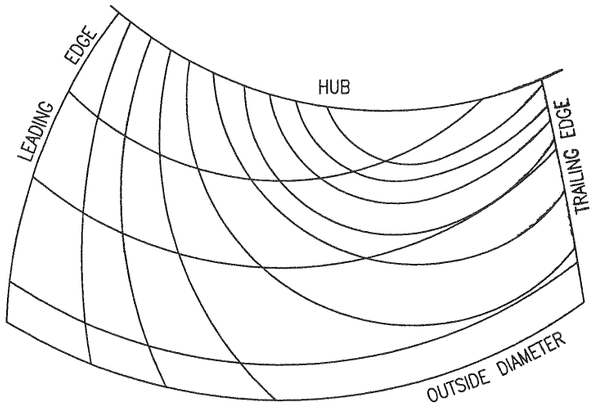

IMPELLER SHARPENING

The leading edges of the impeller may tend to become "blunt" after a period of time with the action of small solid particles in the water. The performance of the impeller will drop as a result.

Any time the inspection cover is removed, the leading edge of the blades should be inspected for wear. If badly worn, remove impeller (see section on dismantling unit) and sharpen as shown below.

After sharpening balance within 45c.m.g.

Both front and rear surfaces to be a smooth

cause cavitation.

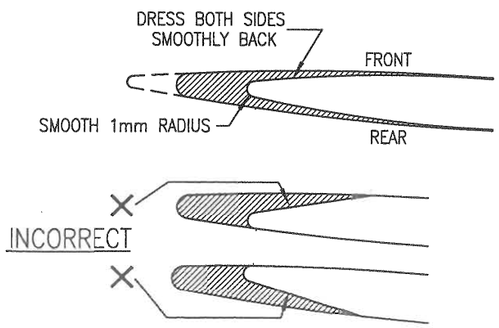

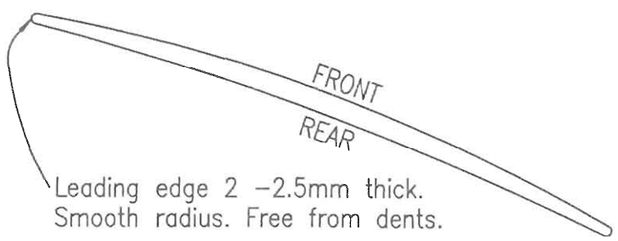

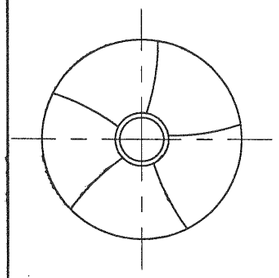

6 BLADE

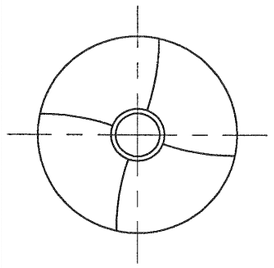

5 BLADE

PITCHED IMPELLERS

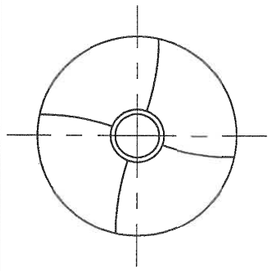

4 BLADE

ITEM	PART NO	QTY	DESCRIPTION	DRG NO
1	107081	1	273 IMPELLER (10.6) - (6 BLADE)	107082
1	107080	1	273 IMPELLER (10.9) - (6 BLADE)	107082
1	107079	1	273 IMPELLER (11.2) - (6 BLADE)	107082
1	107078	1	273 IMPELLER (11.5) - (6 BLADE)	107082
1	107077	1	273 IMPELLER (11.9) - (6 BLADE)	107082
1	107076	1	273 IMPELLER (12.2) - (6 BLADE)	107082
1	107075	1	273 IMPELLER (12.6) - (6 BLADE)	107082
1	107082	1	273 IMPELLER (13) - (6 BLADE)	107082
ITEM	**PART NO**	**QTY**	**DESCRIPTION**	**DRG NO**
1	105791	1	273 IMPELLER (8.5) - (5 BLADE)	105380
1	105980	1	273 IMPELLER (8.8) - (5 BLADE)	105980
1	105768	1	273 IMPELLER (9) - (5 BLADE)	105380
1	105944	1	273 IMPELLER (9.5) - (5 BLADE)	105380
1	105380	1	273 IMPELLER (10) - (5 BLADE)	105380
1	110302	1	273 IMPELLER * (10.5) - (5 BLADE)	105846
1	105846	1	273 IMPELLER * (11.0) - (5 BLADE)	105846
1	110221	1	273 IMPELLER * (11.2) - (5 BLADE)	105846
1	106060	1	273 IMPELLER * (11.5) - (5 BLADE)	105846
ITEM	**PART NO**	**QTY**	**DESCRIPTION**	**DRG NO**
1	105870	1	273 IMPELLER (6.5) - (4 BLADE)	105868
1	105869	1	273 IMPELLER (7) - (4 BLADE)	105868
1	105381	1	273 IMPELLER (7.5) - (4 BLADE)	105868
1	105868	1	273 IMPELLER (8) - (4 BLADE)	105868

REF	NO.	BY	DATE	AMENDMENTS
cl90	C	P.S.	22/4/99	PART # 105869 WAS ON DRG # 105867.
CL3815	B	P.S.	5/12/97	110221 & 110302 ADDED.
CL3800	A	P.S.	20/8/97	105830(4.5) 105379(5.0) 106088(5.5) 105867(6.0) DELETED.
CL3777	0	P.S.	5/3/97	ISSUED FOR PRODUCTION

JET 273

C.W.F.HAMILTON & CO. LTD. CHCH. NZ.

PROJECTION

NAME: HJ273 IMPELLERS

DESIGNED	P.A.S.	12/8/96
DRAWN	P.A.S.	12/8/96
CHECKED		
APPROVED	K.V.E.	4/3/97

SCALE: –

No: ASSY–HJ273 03 001 C

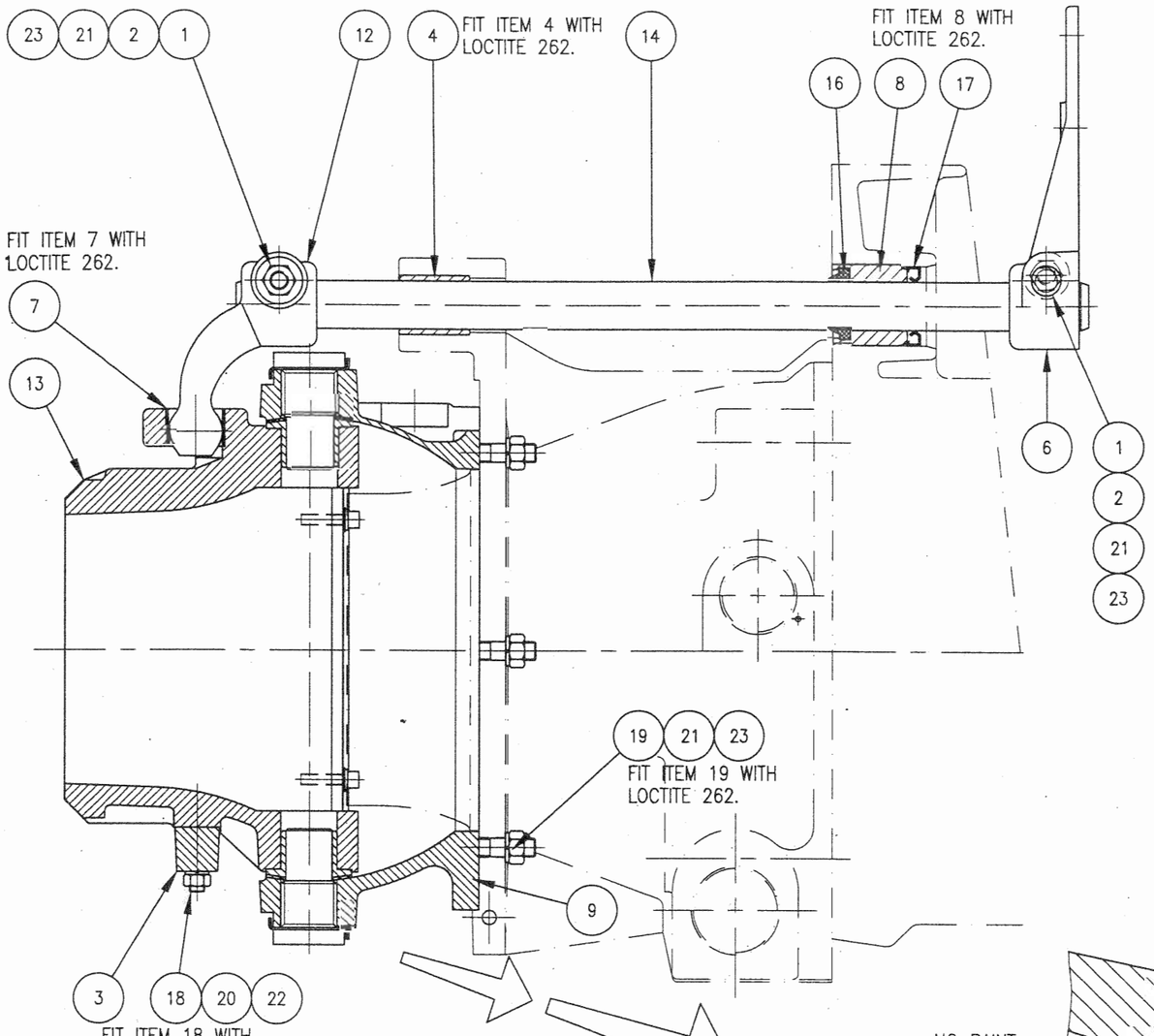

A	Item	Kit	PartNumber	Qty	ProductDescription	DrawingNbr
		A	110895		STEERING NOZZLE ASSEMBLY	HJ27306001
	1		102834	2	COTTER	102834
	2		102993	2	(WASHER) SPECIAL 25mm ODx11mm IDx3mm thk	102993
A	3		103359	1	ANODE MK3	103359
	4		104755	1	STEERING SHAFT BUSH	104755
A	5		105139	2	(WASHER) SPECIAL 54mm OD x30.5mm ID x1.2mm thk 316 STST	105139
	6		106954	1	TILLER	105352
A	7		107156	1	DEFLECTOR CRANK BUSH	102961
	8		108143	1	STEERING SHAFT BUSH	108143
A	9		109238	1	NOZZLE HOUSING (JT STEERING)	109238
A	10		109242	2	(WASHER) SPECIAL THRUST WASHER (JT) (nyloil)	109242
A	11		109243	2	NOZZLE PIVOT BUSH	109243
	12		109703	1	STEERING CRANK (JT STEERING)	109703
A	13		110797	1	NOZZLE JT STEERING	110797
	14		109705	1	SHAFT STEERING JT	109705
A	15		109802	2	NOZZLE PIVOT PIN	109802
	16		61353	1	(SEAL) SCRAPER RING-WYCLIP	61332
	17		61362	1	(OIL SEALS) 25x42x7 (GAYCO DPSM 25427) C/W SS SPRING	N/A
A	18		30661	2	(STUDS) METRIC (316-STST) M8x51	30647
A	19		JCQHXAO	6	(STUDS) METRIC (316-STST) M10x50	30637
A	20		JDQHXAC	2	(NUTS) (METRIC ST ST 316) M8	N/A
A	21		JDQHXAE	8	(NUTS) (METRIC ST ST 316) M10	N/A
A	22		JEQKXAC	2	(WASHERS) (SPRING) METRIC ST ST 316 M8	N/A
A	23		JEQKXAE	8	(WASHERS) (SPRING) METRIC ST ST 316 M10	N/A
A	24		110798	2	LIP SEAL JT STEERING	110798
A	25		30798	4	(SCREWS) (CAPSCREWS) METRIC ST ST 316 M6x25 (SOC HD)	N/A
A	26		JEQKXAA	4	(WASHERS) (SPRING) METRIC ST ST 316 M6	N/A
A	27		JEOZXAD	4	(WASHERS) (FLAT) METRIC ST ST 316 M6x12.5x1.0	N/A

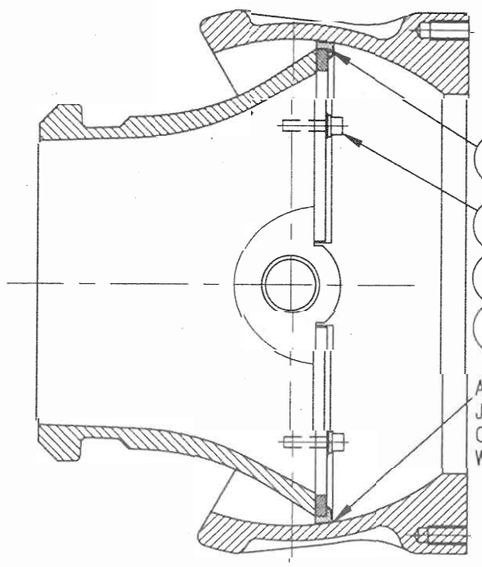

ADJUST LIP SEAL (24) TO JUST CONTACT SPHERICAL SURFACE OF HOUSING (9) AND SECURE WITH CAPSCREWS (25).

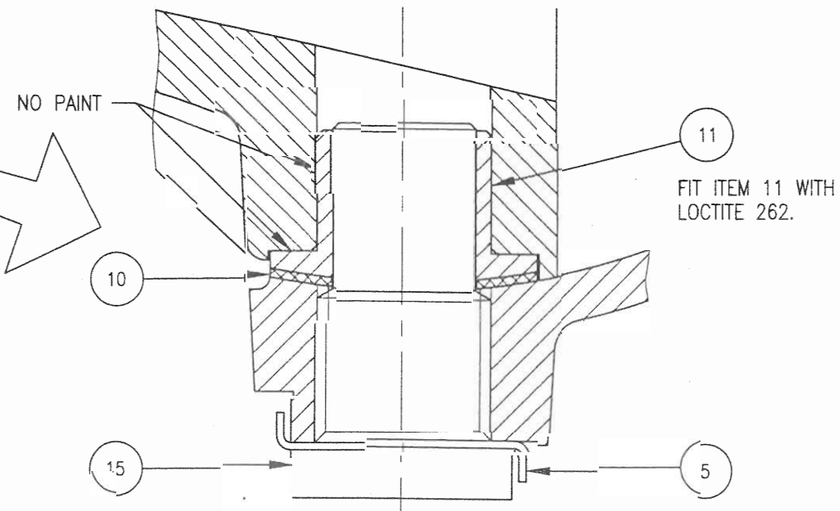

NOTE! TORQUE ITEM 15 TO 200 Nm (150 lbsft) THEN BEND ITEM 5 TO LOCK.

REF	NO.	BY	DATE	AMENDMENTS
1287	F	P.S.	23/3/99	THIS CL FOR PREV AMENDMENTS. ITEMS 21 & 22 NOW IN 110895.
JET 273				

C.W.F.HAMILTON & CO. LTD. CHCH. NZ.

PROJECTION

		DATE
DESIGNED	P.A.S.	1.2.97
DRAWN	P.A.S.	1.2.97
CHECKED		
APPROVED		

NAME
STEERING ASSEMBLY
GENERAL ARRANGEMENT
JT TYPE STEERING
HJ 273 JET

SCALE 1:3 | No: ASSY-HJ273 06 001 | F

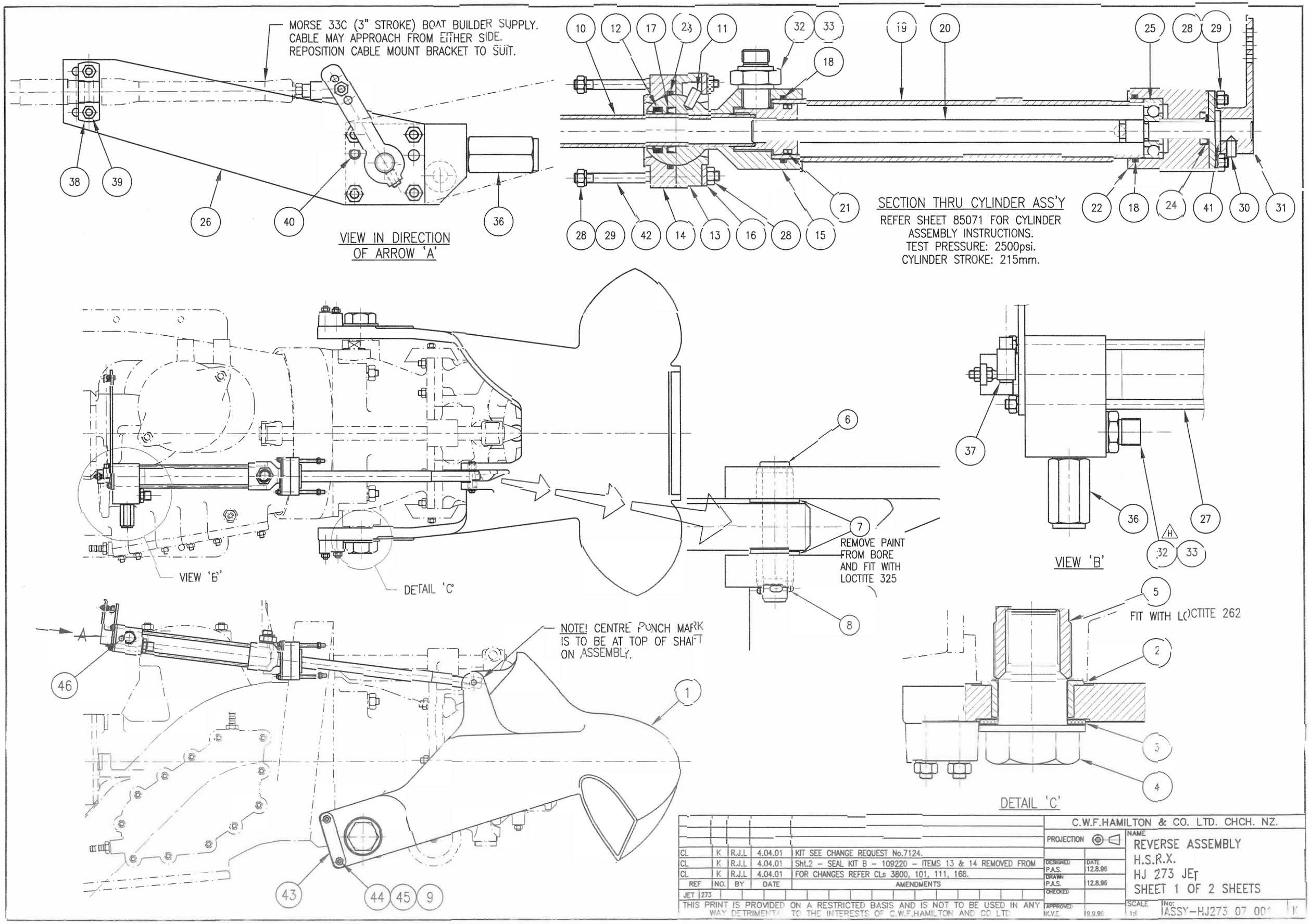

REF	NO.	BY	DATE	AMENDMENTS
CL	K	R.J.L	4.04.01	KIT SEE CHANGE REQUEST No.7124.
CL	K	R.J.L	4.04.01	Sht.2 – SEAL KIT B – 109220 – ITEMS 13 & 14 REMOVED FROM
CL	K	R.J.L	4.04.01	FOR CHANGES REFER CLs 3800, 101, 111, 168.

JET 273

C.W.F.HAMILTON & CO. LTD. CHCH. NZ.

PROJECTION

NAME
REVERSE ASSEMBLY
H.S.R.X.
HJ 273 JET
SHEET 1 OF 2 SHEETS

		DATE
DESIGNED	P.A.S.	12.8.96
DRAWN	P.A.S.	12.8.96
CHECKED		
APPROVED	K.V.E.	19.9.96

SCALE 1:6

No: ASSY–HJ273 07 001 K

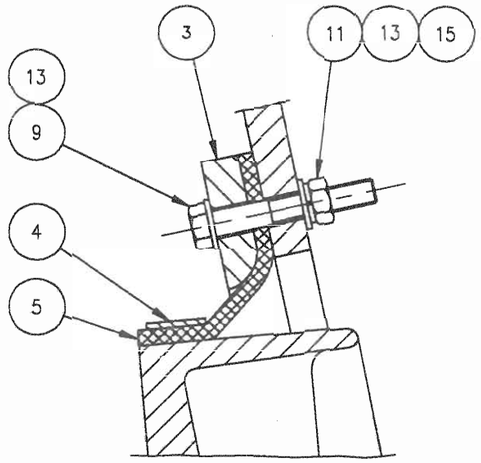

DETAIL 'C'

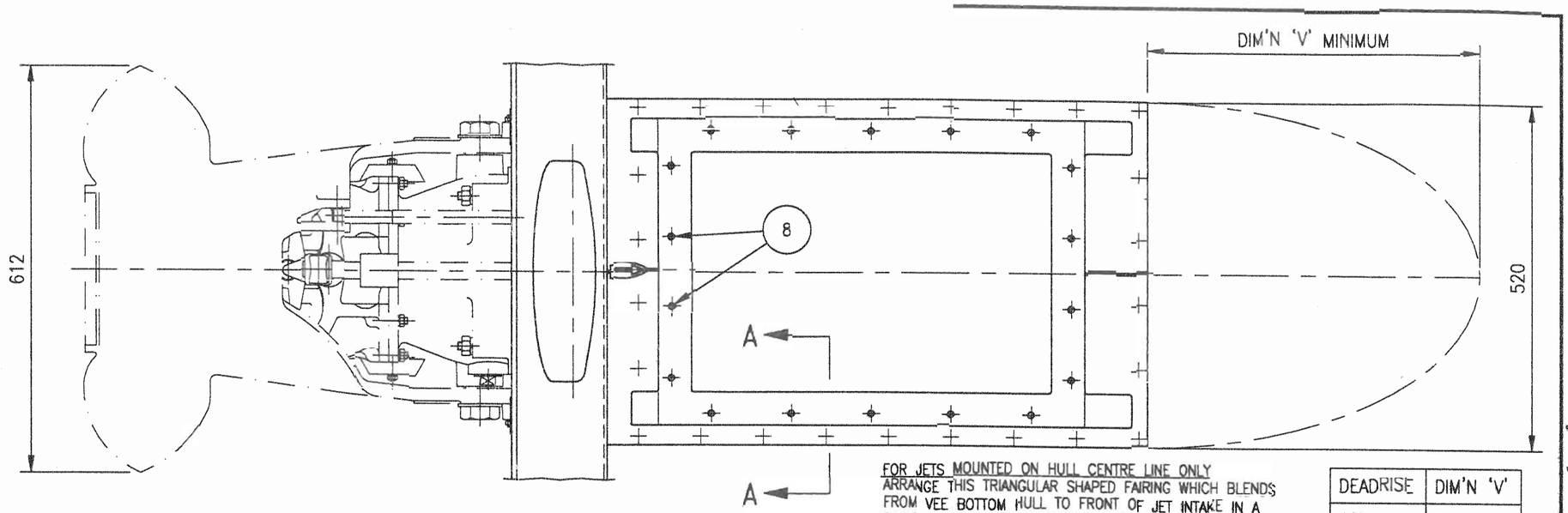

FOR JETS MOUNTED ON HULL CENTRE LINE ONLY
ARRANGE THIS TRIANGULAR SHAPED FAIRING WHICH BLENDS FROM VEE BOTTOM HULL TO FRONT OF JET INTAKE IN A SMOOTHLY CURVED CONTOUR. DIMENSION 'V' DEPENDS ON HULL DEADRISE.

DEADRISE	DIM'N 'V'
10°	500
20°	1100
30°	1700

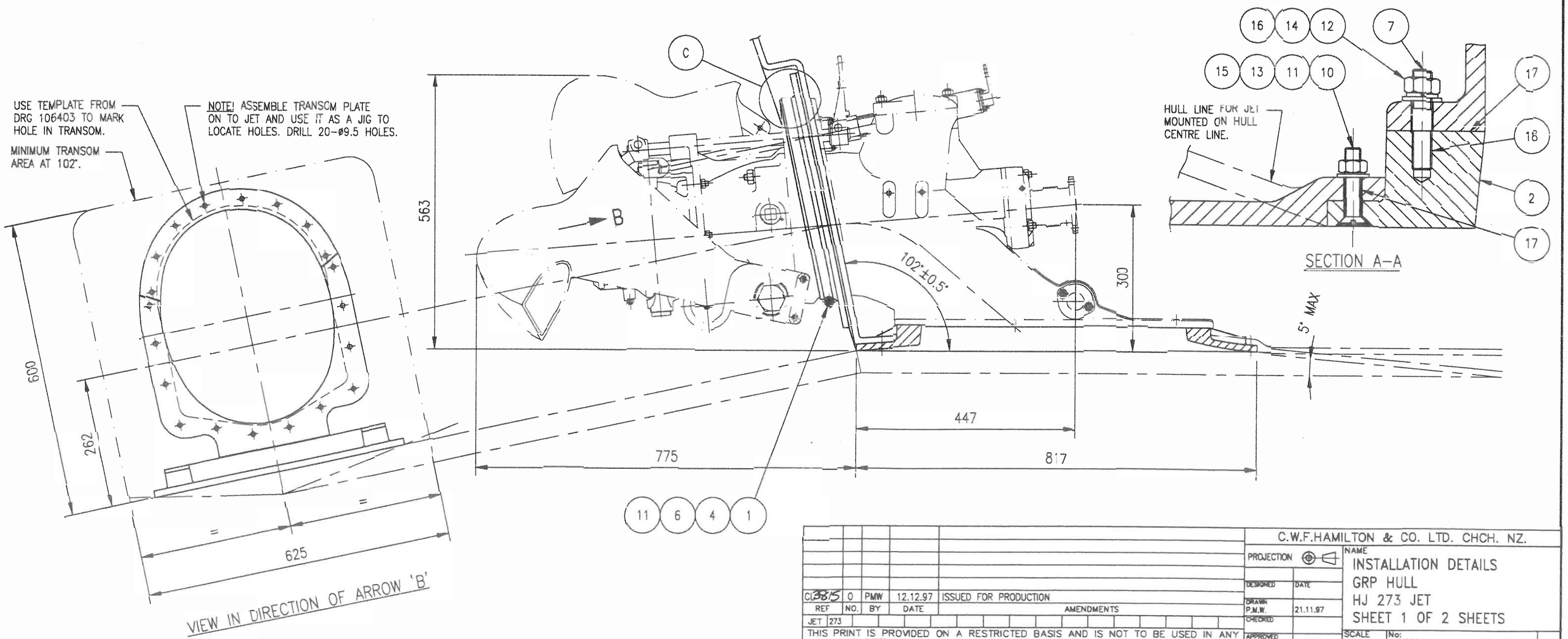

VIEW IN DIRECTION OF ARROW 'B'

REF	NO.	BY	DATE	AMENDMENTS
C3815	0	PMW	12.12.97	ISSUED FOR PRODUCTION

JET 273

C.W.F.HAMILTON & CO. LTD. CHCH. NZ.

PROJECTION

DESIGNED | DATE

DRAWN P.M.W. | 21.11.97

CHECKED

APPROVED K.V.E.

NAME
INSTALLATION DETAILS
GRP HULL
HJ 273 JET
SHEET 1 OF 2 SHEETS

SCALE 1:8

No: ASSY-HJ273 08 001 | 0

A	B	C	D	E	F	G	H	Code	Item	Kit	Part Nbr	Qty	ProductDescription	Drawing Nbr
		C						4	1		103239	1	TRANSOM SEAL CLAMP FILLER PIECE	103239
A								4	2		106238	1	INTAKE BLOCK - GRP HULL	106238
		C						4	3		106401	1	TRANSOM PLATE	106401
		C						4	4		106405	1	TRANSOM SEAL CLAMP	106405
		C						4	5		106408	1	TRANSOM SEAL	106408
		C						4	6		103145	1	STUD M8x110	30647
	B							4	7		30671	16	STUD M10x51	30637
	B							4	8		30698	2	STUD M10x70	30637
		C						4	9		HZQHXBF	20	HEX HEAD MACHINE SCREW M8x55	N/A
A								4	10		HZPPXDR	26	CSK HEAD MACHINE SCREW M8x40	N/A
A26		C22						4	11		JDQHXAC	48	NUT M8	N/A
	B							4	12		JDQHXAE	18	NUT M10	N/A
A26		C20						4	13		JEOZXAF	46	FLAT WASHER M8x16x1.2	N/A
	B							4	14		JEOZXAI	18	FLAT WASHER M10x21x1.2	N/A
A26		C20						4	15		JEQKXAC	46	SPRING WASHER M8	N/A
	B							4	16		JEQKXAE	18	SPRING WASHER M10	N/A
A1	B1							4	17		JMNGAAR	2	NEUT-CURE RTV SILICONE 310G	N/A
	B							4	18		MRINAAI	1	LOCTITE 262 10ML BOTTLE	N/A
A1	B1	C1						4	19		63595	3	BOLT BOX	N/A

Kit	Part Nbr	Qty	ProductDescription	Drawing Nbr
A	109801	1	INTAKE BLOCK KIT (GRP HULL)	HJ27308001
B	109800	1	BOLT KIT (JET UNIT TO INTAKE BLOCK) (GRP & ALUM HULLS)	HJ27308001
C	109798	1	TRANSOM PLATE KIT (ALUM & GRP HULLS)	HJ27308001

REF	NO.	BY	DATE	AMENDMENTS
CL385	0	PMW	12.12.97	ISSUED FOR PRODUCTION

JET 273

C.W.F.HAMILTON & CO. LTD. CHCH. NZ.

PROJECTION

	DATE
DESIGNED	
DRAWN P.S.	1.1.97
CHECKED	
APPROVED K.Y.E.	

NAME
INSTALLATION DETAILS
GRP HULL
HJ 273 JET
SHEET 2 OF 2 SHEETS

SCALE -

No: ASSY-HJ273 08 001 0

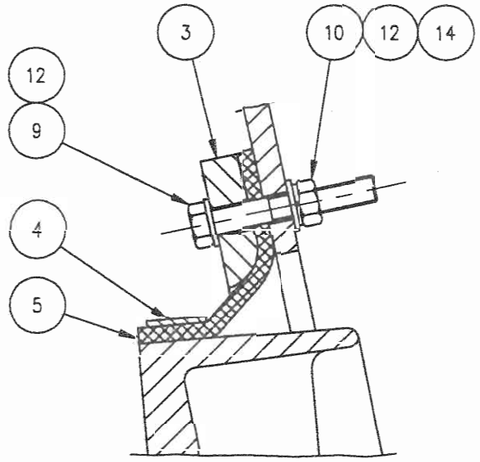

DETAIL 'C'

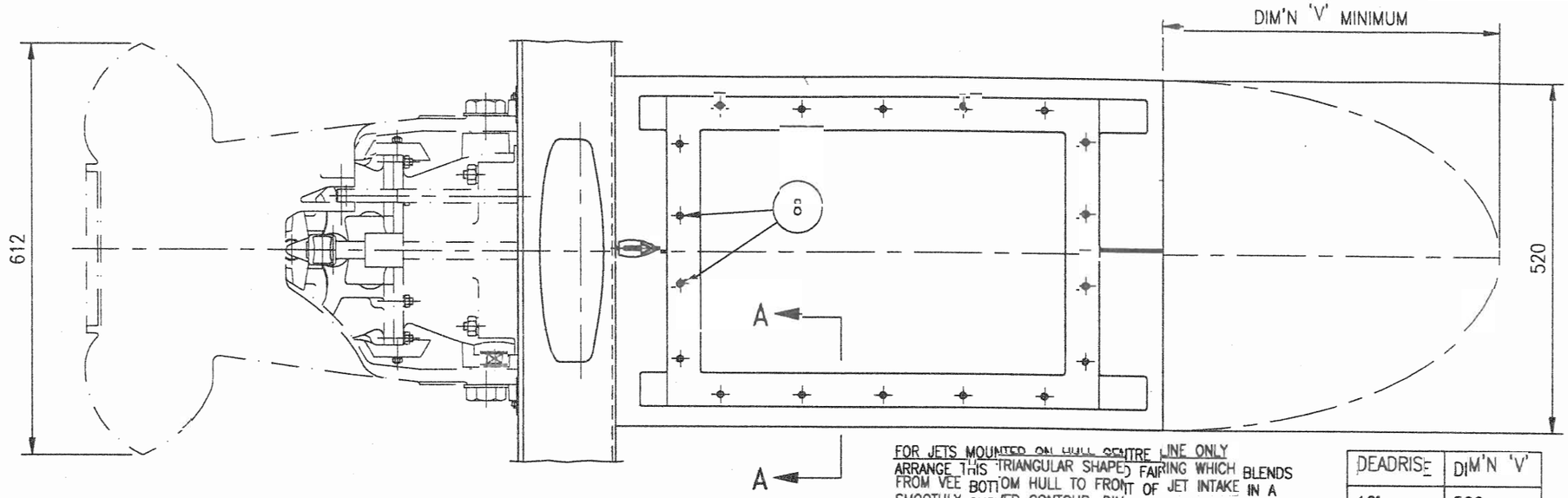

FOR JETS MOUNTED ON HULL CENTRE LINE ONLY ARRANGE THIS TRIANGULAR SHAPED FAIRING WHICH BLENDS FROM VEE BOTTOM HULL TO FRONT OF JET INTAKE IN A SMOOTHLY CURVED CONTOUR. DIMENSION 'V' DEPENDS ON HULL DEADRISE.

DEADRISE	DIM'N 'V'
10°	500
20°	1100
30°	1700

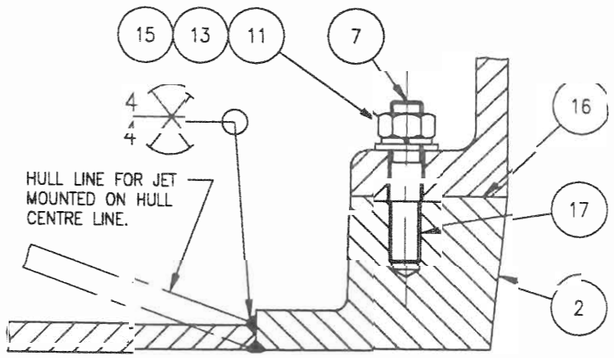

SECTION A–A

USE TEMPLATE FROM DRG 106403 TO MARK HOLE IN TRANSOM.

NOTE! ASSEMBLE TRANSOM PLATE ON TO JET AND USE IT AS A JIG TO LOCATE HOLES. DRILL 20–ø9.5 HOLES.

MINIMUM TRANSOM AREA AT 102°.

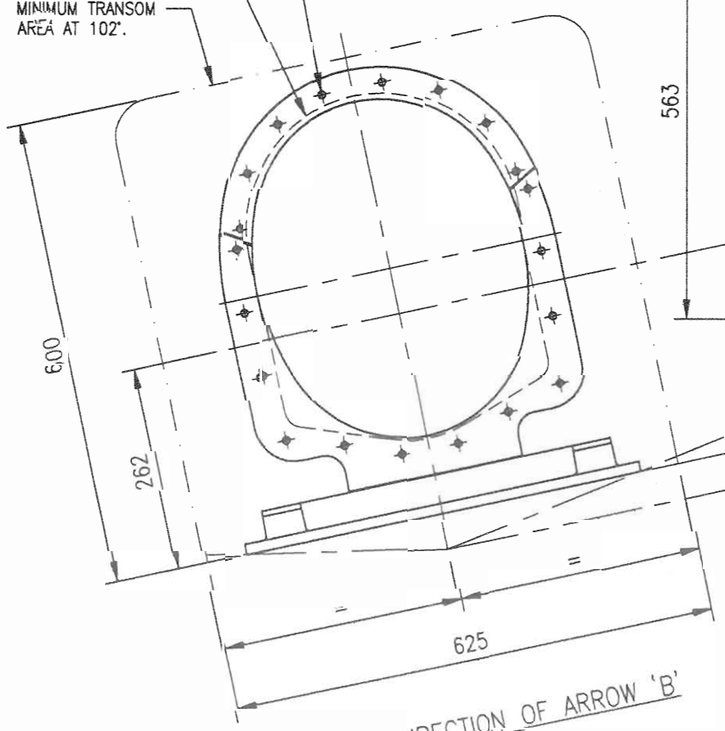

'VIEW IN DIRECTION OF ARROW 'B'

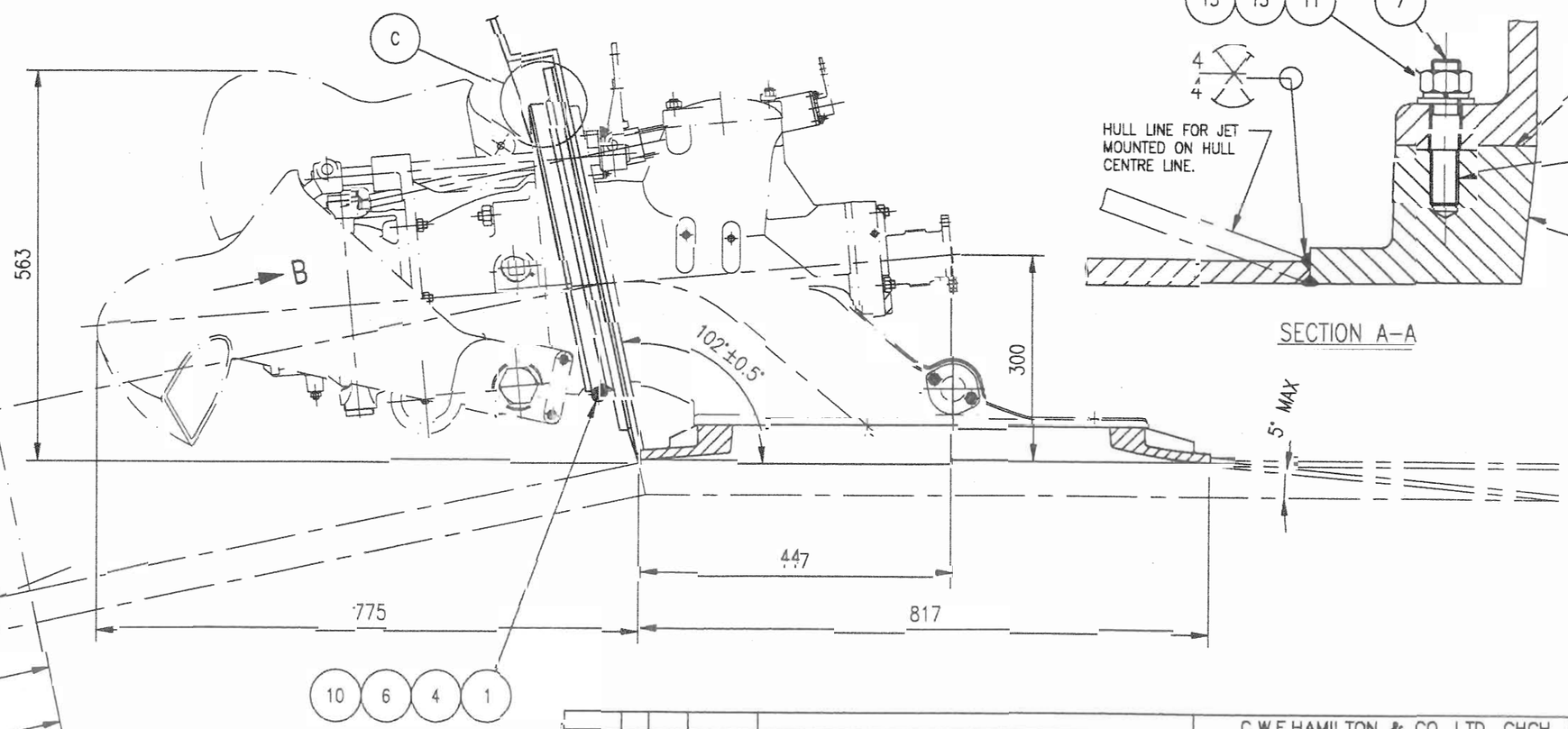

REF	NO.	BY	DATE	AMENDMENTS
CL3815	0	PMW	12.12.97	ISSUED FOR PRODUCTION
JET 273				

THIS PRINT IS PROVIDED ON A RESTRICTED BASIS AND IS NOT TO BE USED IN ANY WAY DETRIMENTAL TO THE INTERESTS OF C.W.F.HAMILTON AND CO LTD.

C.W.F.HAMILTON & CO. LTD. CHCH. NZ.

PROJECTION

DESIGNED	DATE	
DRAWN P.M.W.	20.11.97	
CHECKED		
APPROVED K.V.E.		

NAME
INSTALLATION DETAILS
ALUMINIUM HULL
HJ 273 JET
SHEET 1 OF 2 SHEETS

SCALE 1:8

No: ASSY–HJ273 08 002 0

A	B	C	D	E	F	G	H	Code	Item	Kit	Part Nbr	Qty	ProductDescription	Drawing Nbr
		C						4	1		103239	1	TRANSOM SEAL CLAMP FILLER PIECE	103239
A								4	2		106237	1	INTAKE BLOCK - ALUMINIUM HULL	106238
		C						4	3		106401	1	TRANSOM PLATE	106401
		C						4	4		106405	1	TRANSOM SEAL CLAMP	106405
		C						4	5		106408	1	TRANSOM SEAL	106408
		C						4	6		103145	1	STUD M8x110	30647
	B							4	7		30671	16	STUD M10x51	30637
	B							4	8		30698	2	STUD M10x70	30637
		C						4	9		HZQHXBF	20	HEX HEAD MACHINE SCREW M8x55	N/A
		C						4	10		JDQHXAC	22	NUT M8	N/A
	B							4	11		JDQHXAE	18	NUT M10	N/A
		C						4	12		JEOZXAF	20	FLAT WASHER M8x16x1.2	N/A
	B							4	13		JEOZXAI	18	FLAT WASHER M10x21x1.2	N/A
		C						4	14		JEQKXAC	20	SPRING WASHER M8	N/A
	B							4	15		JEQKXAE	18	SPRING WASHER M10	N/A
	B1							4	16		JMNGAAR	1	NEUT-CURE RTV SILICONE 310G	N/A
	B1							4	17		MRINAAI	1	LOCTITE 262 10ML BOTTLE	N/A
	B1	C1						4	18		63595	2	BOLT BOX	N/A

Kit	Part Nbr	Qty	ProductDescription	Drawing Nbr
A	106237	1	INTAKE BLOCK - ALUMINIUM HULL	106238
B	109800	1	BOLT KIT (JET UNIT TO INTAKE BLOCK) (GRP & ALUM HULLS)	HJ27308001
C	109798	11	TRANSOM PLATE KIT (ALUM & GRP HULLS)	HJ27308001

REF	NO.	BY	DATE	AMENDMENTS
CL385	0	PMW	12.12.97	ISSUED FOR PRODUCTION
JET 273				

C.W.F.HAMILTON & CO. LTD. CHCH. NZ.

PROJECTION

DESIGNED | DATE

DRAWN P.S. | 1.1.97

CHECKED

APPROVED K.V.E.

NAME
INSTALLATION DETAILS
ALUMINIUM HULL
HJ 273 JET
SHEET 2 OF 2 SHEETS

SCALE -

No: ASSY-HJ273 08 002 | A

105794 | F

REMOVE SHARP CORNERS DO NOT SCALE DIMENSIONS IN INCHES/M.M. ANGLE PROJECTION

ITEM Nº	PART Nº	Nº REQ'D.	DESCRIPTION	DRG. Nº
1	105795	1	COUPLING PULLER	105795
2	105796Y	1	BOLT-PULLER	105796Y
3	105797	1	REACTION ARM - COUPLING.	105797
(C1) 4	HYIXYBF	2	BOLTS M8 x 55 LONG ZINC PLATED	THIS
5	JDPVYAC	2	NUTS M8 ZINC PLATED	THIS
6	JMNGAAQ	1	SOCKET 36AF x 3/4" SQ DRIVE	THIS
(B) 7	105950SY	1	PULLER - IMPELLER	105950SY
(C3) (B) 8	110276	1	FITTING SLEEVE for WATERSEAL	110276
(C2) 9				
10				

REF	NO	BY	DATE	AMENDMENTS
CL3809	F	P.S.	14-10-97	ITEM 8 ADDED.
CL3510	E	P.S.	6-7-90	ITEM 6 CODE ADDED. ITEM 4 WAS HYIXXBR
CL3508	D	P.S.	16-5-90	ITEM 7 WAS PART Nº 105825Y. ITEM 8 105826Y DELETED
	C			3/ ITEM 7 & 8 PART Nºs ADDED 'Y' AND DRG Nºs WERE 105825 105826
CL3465	C	RL	30·6·88	ITEM 4 WAS M10 BOLT, ITEM 5 WAS M8 NUT. 2/ ITEMS 9 & 10 DELETED.
CL3455	B	C.W.R.	2-12-87	ITEM 7 & 8 REDESIGNED
CL3453	A	RL	22·9·87	ITEMS 7 TO 10 ADDED AND ITEM 4 WAS 35 LG.
CL3452	O	RL	11·8·87	ISSUED FOR MANUFACTURE

C. W. F. HAMILTON & CO. LTD., CH.CH., N.Z.

MATERIAL: AS SHOWN

MAT'L. CERT. YES NO

DRAWN: R.J.L DATE: 11·8·87

CHECKED:

APPROVED: 10·7·90

√ = NO √ EXCEPT AS STATED

UNLIMITED DIMENSIONS TO BE ±

NAME: TOOL KIT FOR 271 JET

SCALE: — NUMBER: 105794 F

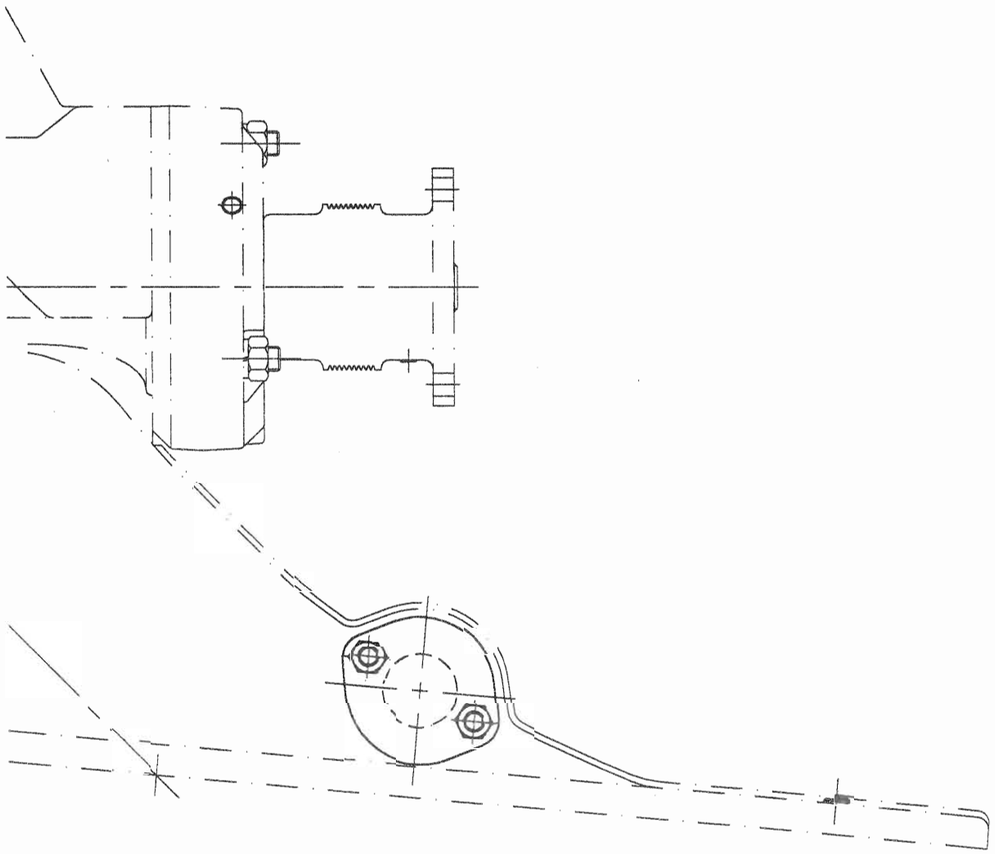

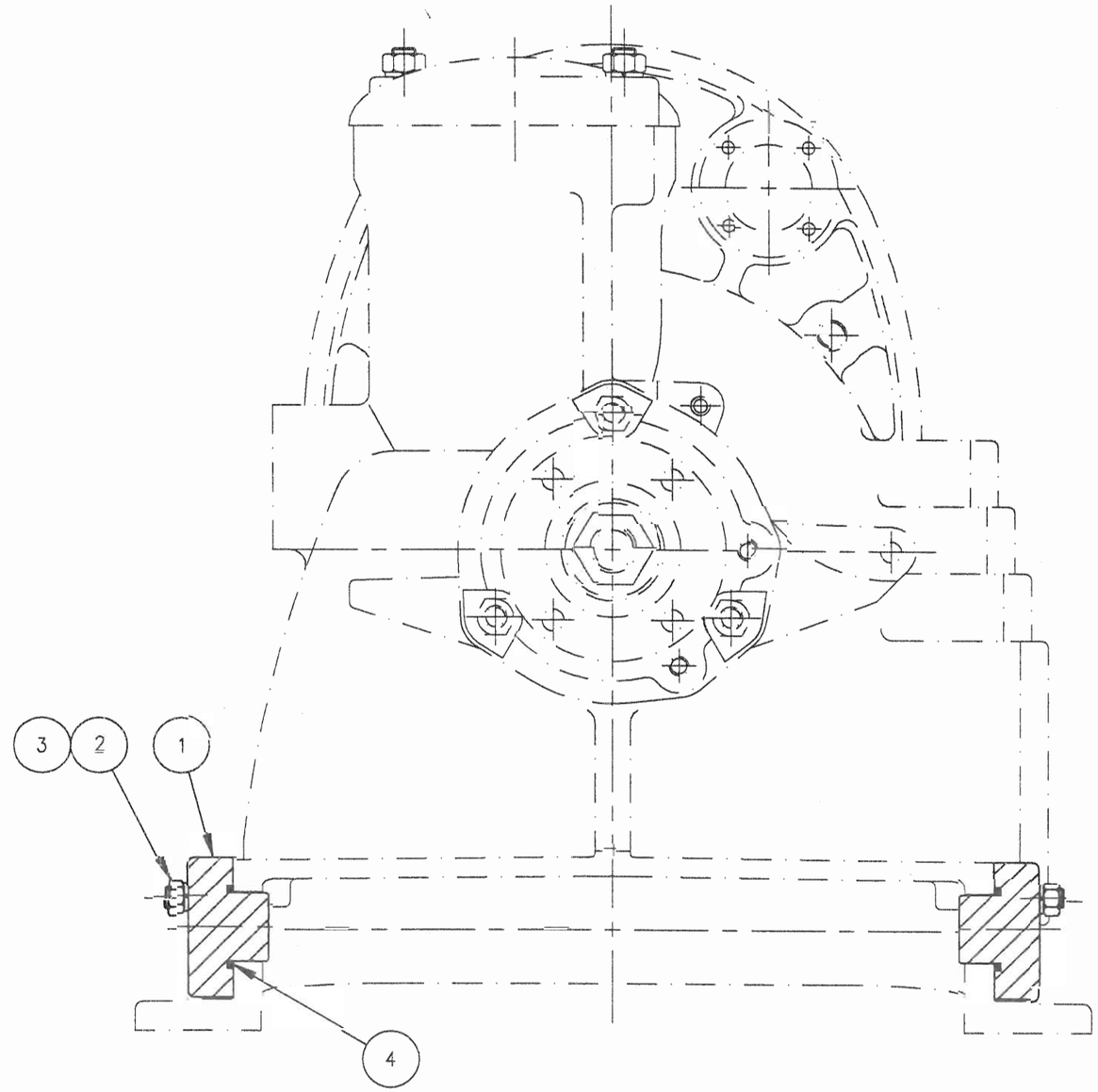

A	B	C	D	E	F	G	H	Code	Item	Kit	Part Nbr	Qty	ProductDescription	Drawing Nbr
								4	1		105921	1	BLANKING PLUG	105921
								4	2		JEQKXAE	4	SPRING WASHER M10	N/A
								4	3		JDQHXAE	4	NUT M10	N/A
								3	4		HMHRAAW	2	`O' RING 0.13x1.44x1.69 (221N70)	N/A

REF	NO.	BY	DATE	AMENDMENTS
CL3&5	0	PMW	12.12.97	ISSUED FOR PRODUCTION

JET 273

THIS PRINT IS PROVIDED ON A RESTRICTED BASIS AND IS NOT TO BE USED IN ANY WAY DETRIMENTAL TO THE INTERESTS OF C.W.F.HAMILTON AND CO LTD.

C.W.F.HAMILTON & CO. LTD. CHCH. NZ.

PROJECTION

DESIGNED DATE

DRAWN P.M.W. 4.12.97

CHECKED

APPROVED K.V.E.

NAME
SCREEN RAKE
BLANKING PLUGS
HJ 273 JET

SCALE 1:3

No: ASSY-HJ273 09 001 0

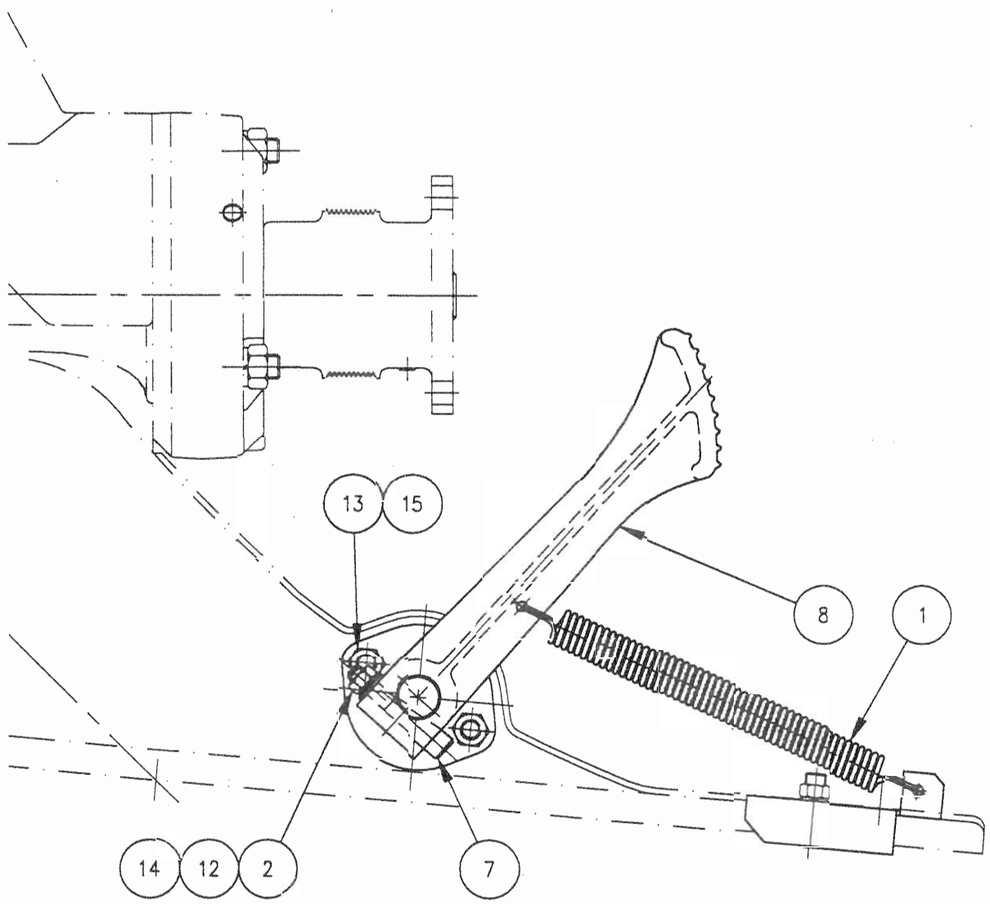

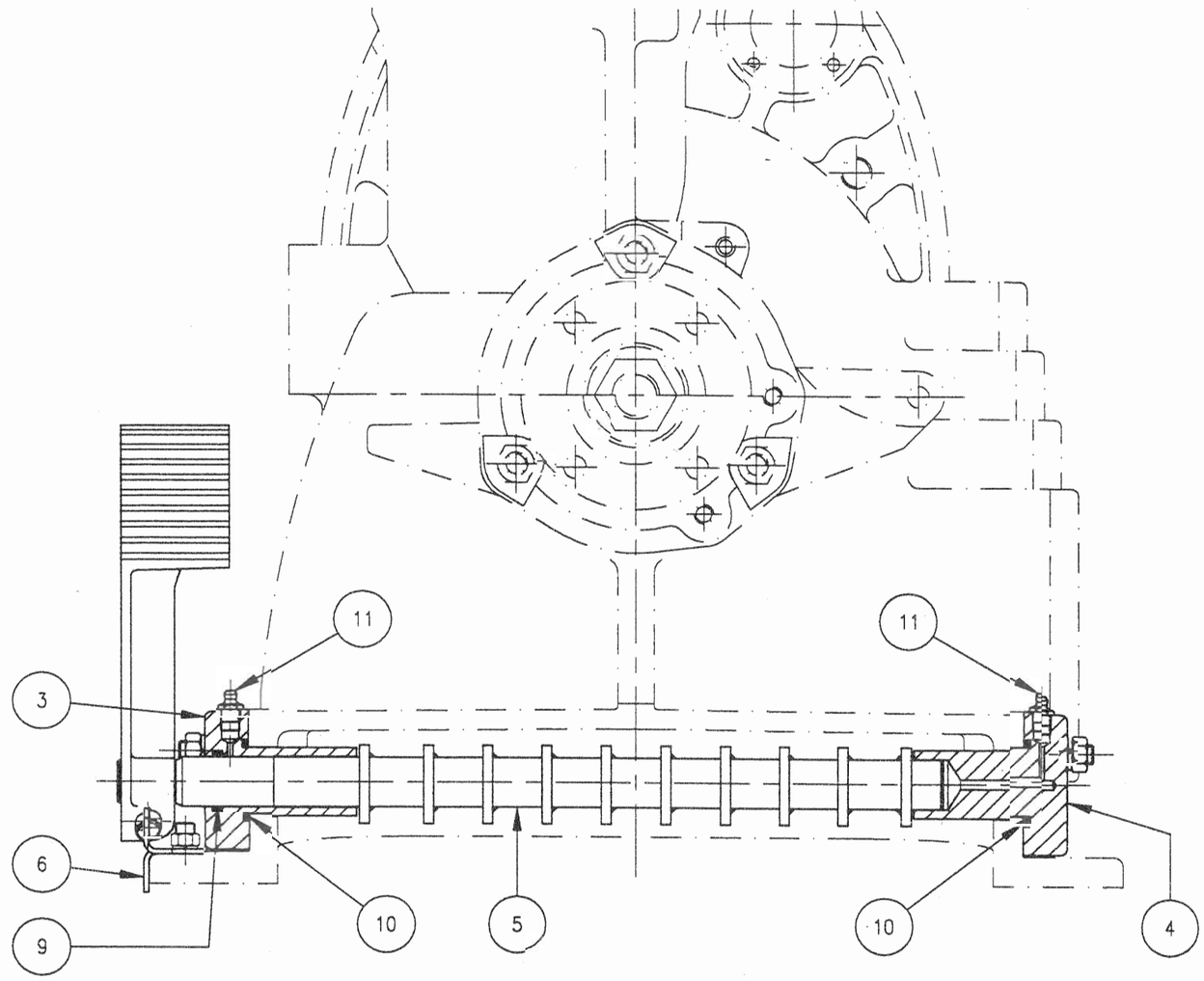

A	B	C	D	E	F	G	H	Code	Item	Kit	PartNumber	Qty	ProductDescription	DrawingNbr
								4	1		102364	1	TENSION SPRING 316 STST	102364
								4	2		103637	1	WASHER AB2 8mm	103637
								4	3		104638	1	SCREEN RAKE BEARING STARBOARD	104638
								4	4		104644	1	SCREEN RAKE BEARING PORT	104644
								4	5		105277-Y	1	SCREEN RAKE WELDED ASSEMBLY	105277-Y
								4	6		105359	1	SPRING ANCHOR BRACKET	105359
								4	7		105931	1	COTTER PIN	105931
								4	8		106274	1	RAKE ACTUATOR	106274
								4	9		HMHRAAS	1	`O' RING 0.13x1.0"x1-1/4" (214N70)	N/A
								4	10		HMHRAAW	2	`O' RING 0.13x1.44x1.69 (221N70)	N/A
								4	11		HEIDAAA	2	GREASE NIPPLE (H29) 1/8"BSP	N/A
								4	12		JDQHXAC	1	NUT M8	N/A
								4	13		JDQHXAE	4	NUT M10	N/A
								4	14		JEQKXAC	1	SPRING WASHER M8	N/A
								4	15		JEQKXAE	4	SPRING WASHER M10	N/A

REF	NO.	BY	DATE	AMENDMENTS
CL3875	0	PMW	12.12.97	ISSUED FOR PRODUCTION
JET 273				

C.W.F.HAMILTON & CO. LTD. CHCH. NZ.

PROJECTION

NAME: SCREEN RAKE ASSEMBLY HJ 273 JET

DESIGNED | DATE

DRAWN P.M.W. | 4.12.97

CHECKED

APPROVED K.V.E.

SCALE 1:3

No: ASSY-HJ273 09 002 | 0

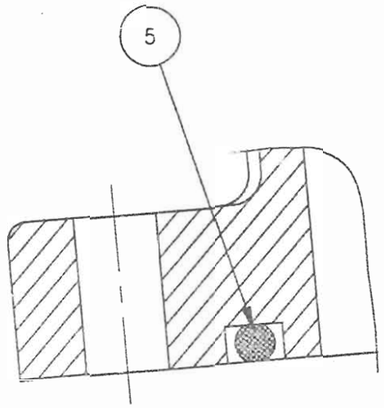

DETAIL 'A'

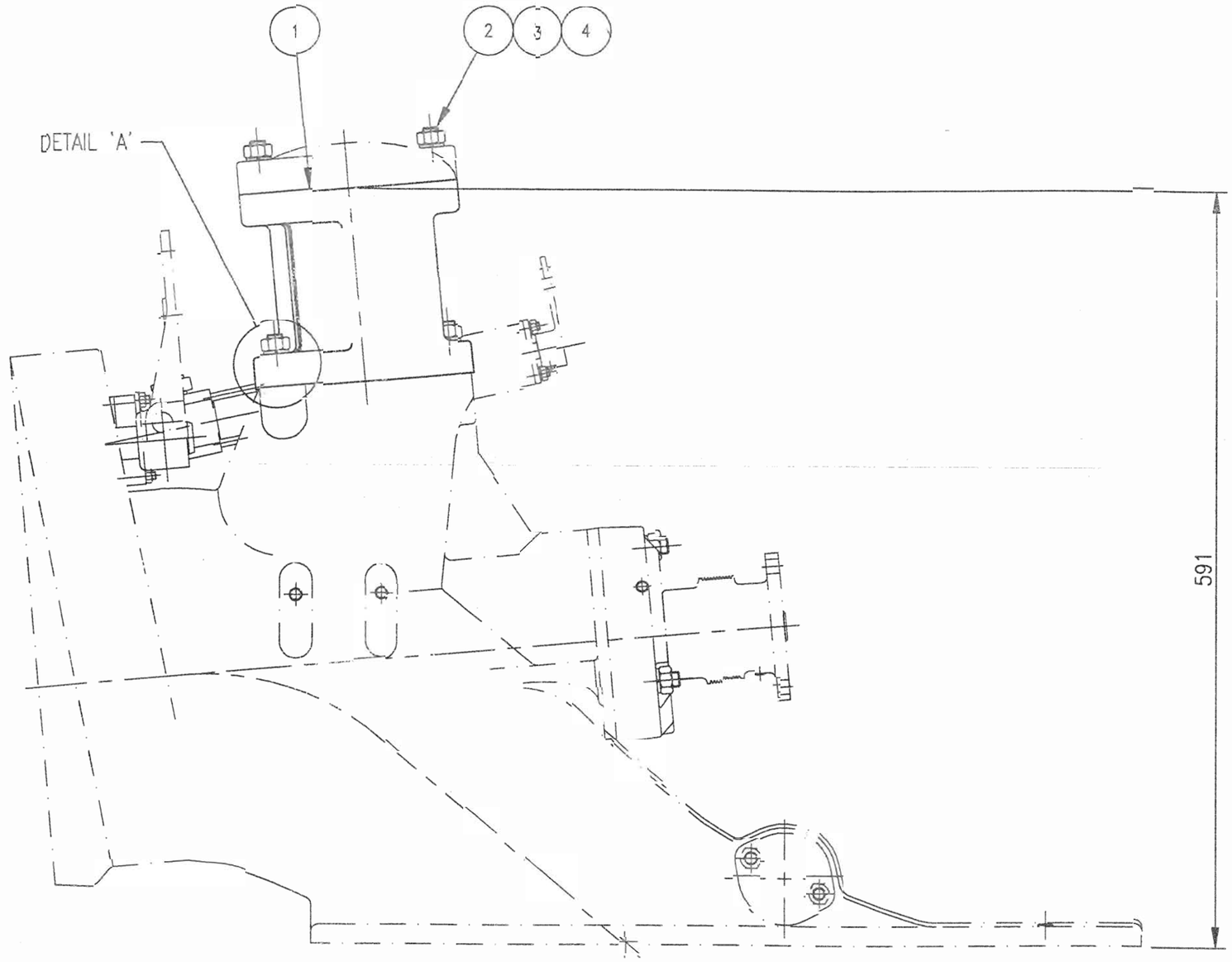

A	B	C	D	E	F	G	H	Code	Item	Kit	Part Nbr	Qty	ProductDescription	Drawing Nbr
									1		108323	1	INSPECTION HATCH EXTENSION	108323
									2		103916	2	STUD M12x64	30639
									3		JDQHXAH	2	NUT M12	N/A
									4		JEQKXAH	2	SPRING WASHER M12	N/A
									5		HMHRADQ	1	`O' RING 0.25x5.25x5.75 (431N70)	N/A

REF	NO.	BY	DATE	AMENDMENTS
CL	A	PMW	12.12.97	ITEM 1 WAS 108323
CL3748	0	PS	8.5.96	ISSUED FOR PRODUCTION
JET 273				

C.W.F.HAMILTON & CO. LTD. CHCH. NZ.

PROJECTION

NAME: HATCH EXTENSION HJ 273 JET

DESIGNED P.A.S.	DATE 3.5.96	
DRAWN P.M.W.	5.12.97	
CHECKED		
APPROVED K.V.E.		

SCALE 1:4

No: ASSY-HJ273 10 004 A

PART No. 61486		PAC SEAL SUB ASSY. 08-1459	
ITEM NO	NO REQD	DESCRIPTION	PAC SEAL No.
1	1	NEOPRENE BOOT	09-200003
2	1	CERAMIC STATIONARY FACE	08-920015

PROJECTION

PART No. 61363.			
ITEM NO	NO REQD	DESCRIPTION	PAC SEAL No.
3	1	RESIN BONDED FACE	SUB ASSY. 60-200001
4	1	NEOPRENE BELLOWS	
5	1	HOLDER	
6	1	SPRING	06-200010
7	1	SPRING CAP	12-200021

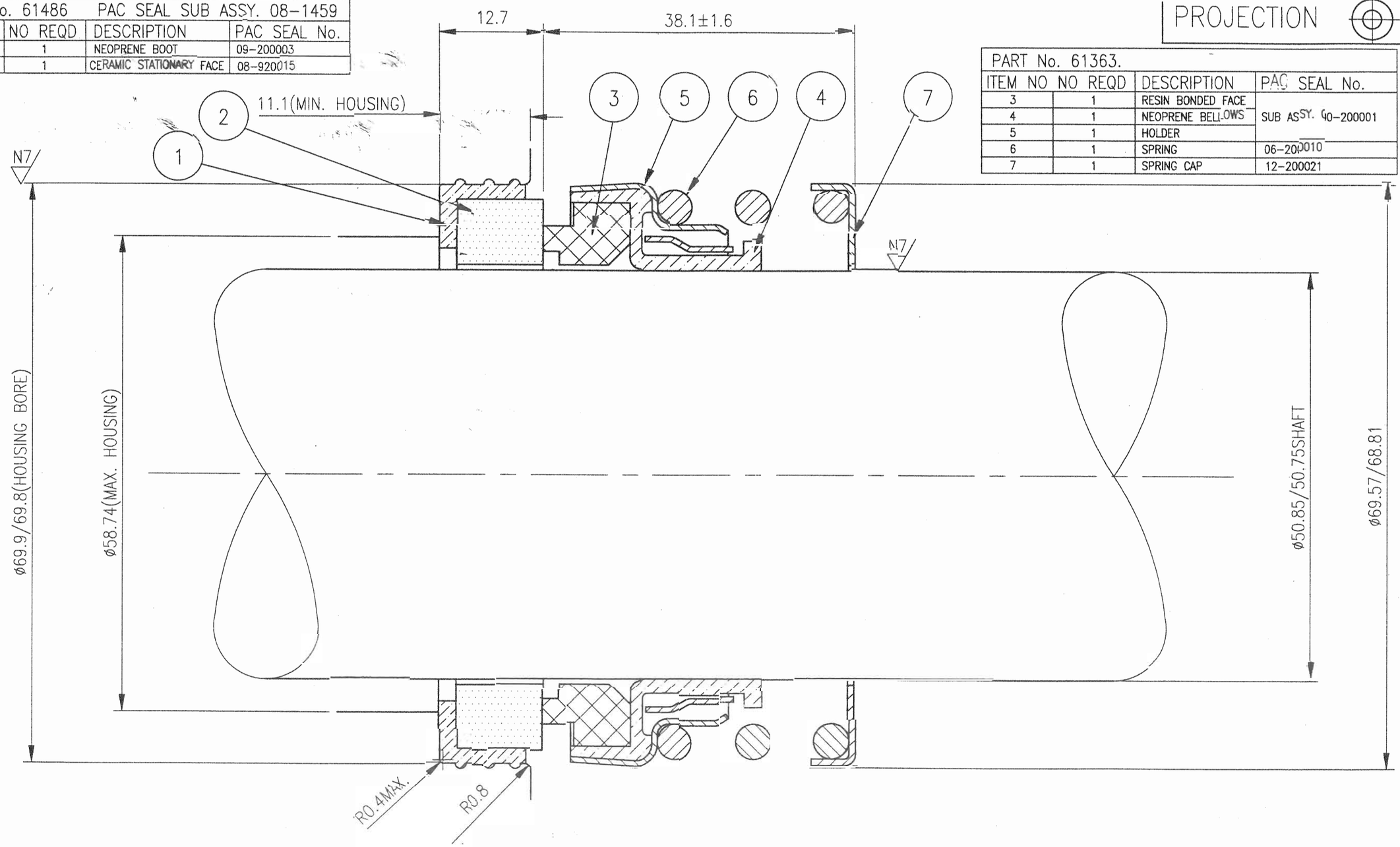

REF	NO.	BY	DATE	AMENDMENTS
CL3727	0	PS	13-11-95	ISSUED FOR PRODUCTION

JET 273

THIS PRINT IS PROVIDED ON A RESTRICTED BASIS AND IS NOT TO BE USED IN ANY WAY DETRIMENTAL TO THE INTERESTS OF C.W.F.HAMILTON AND CO LTD.

C.W.F.HAMILTON & CO. LTD. CHCH. NZ.

MATERIAL: PAC SEAL 21-200-04

√ = N9 EXCEPT AS STATED

UNLIMITED DIMENSIONS TO BE ± 0.5

MAT'L CERT

DESIGNED	K.V.A.	7/7/95
DRAWN	P.A.S.	7/7/95
CHECKED		
APPROVED	K.V.A.	7-11-95

NAME: SHAFT WATER SEAL ASSEMBLY (2 INCH) HJ273

SCALE 2:1

No: A3- 61485

0

61485 0

63974 | 0

PROJECTION

CORROSION METER INSTALLATION INSTRUCTIONS

Install the sensor through-hull in a convenient location where it will not be subject to physical damage. Run wire (16 gauge or larger) from the sensor to the SENSOR TERMINAL on the monitor. Protect bolt with heat shrink tubing, seal the connection at the sensor terminal with a waterproof sealer DO NOT allow the connection to rest in bilge water unprotected. ISOLATE BOLT AND NUT FROM METAL HULLS with heat shrink tubing and #10 plastic washers.

The wire from the bonding system or metal hull attaches to the D.C. GROUND terminal. These wires should be #16 AWG (1.3 metric) gauge or larger.

To use the meter, hold the "TEST" button down for 5 to 6 seconds, then release and read the meter after the needle has stabilized (usually 1 to 2 seconds). The meter will de-activate shartly.

A loop wire to the rudder shaft and a shaft brush to the shafts make a well bonded system. Read our Corrosion Workbook for more information.

Rember
All bonding connections should be visually inspected and sealed, and checked at least twice a year with a portable corrosion test meter to assure continous protection.

Battery size is AA. Change battery annually. Drop in normal voltage indicated while pressing "TEST" button indicates weak battery.

DO NOT paint sensor.

Protect meter from severe vibration. Vibration and shock can damage meter movement.

Underwater growth can affect meter readings. Clean underwater surface of sensor at least 4 times a year. Rapid de-activation of meter indicates a fouled sensor.

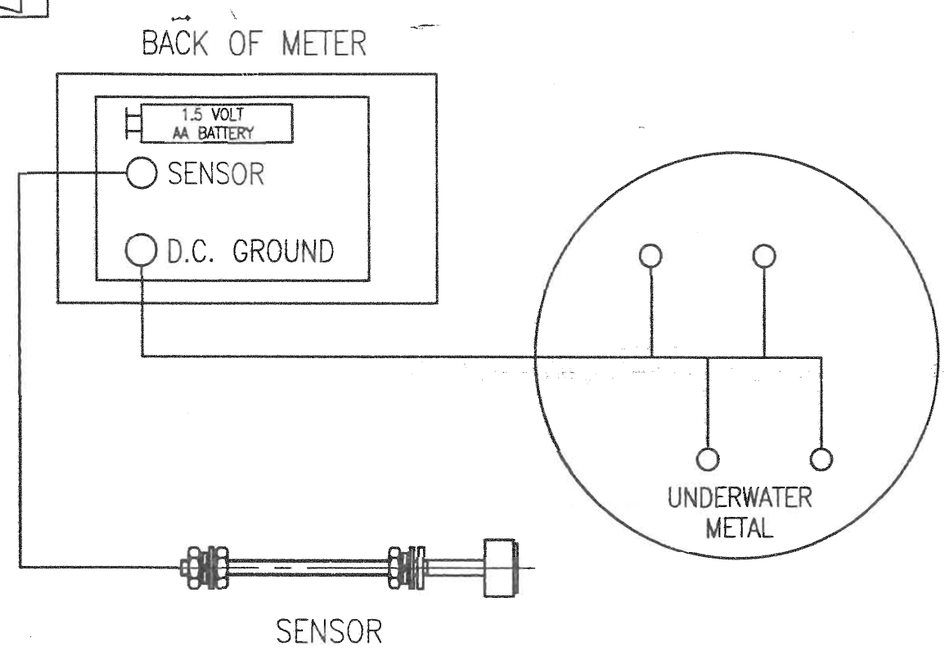

WIRING DIAGRAM

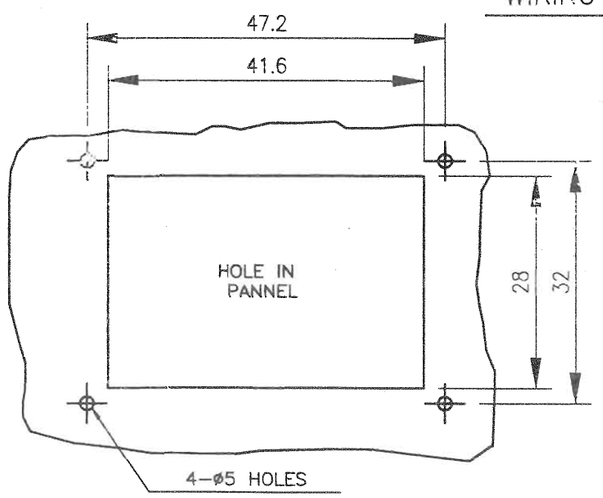

METER MOUNTING

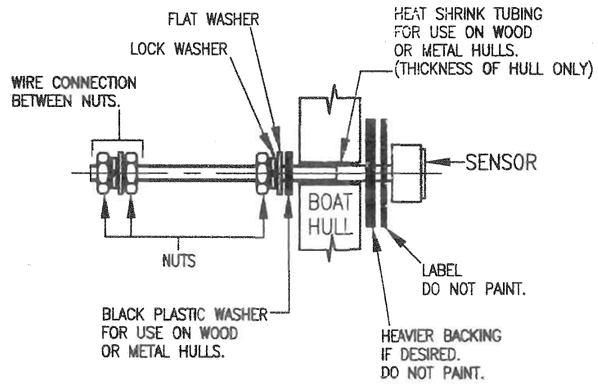

SENSOR MOUNTING

INSTALLATION DETAILS.

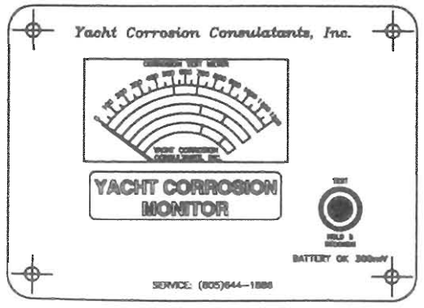

METER

SENSOR

REF	NO.	BY	DATE	AMENDMENTS
CL3718	0	R.J.L	28.08.95	ISSUED FOR PRODUCTION
JET	ALL			

THIS PRINT IS PROVIDED ON A RESTRICTED BASIS AND IS NOT TO BE USED IN ANY WAY DETRIMENTAL TO THE INTERESTS OF C.W.F.HAMILTON AND CO LTD.

C.W.F.HAMILTON & CO. LTD. CHCH. NZ.

MATERIAL

√= N9 EXCEPT AS STATED

UNLIMITED DIMENSIONS TO BE ±

MAT'L CERT		
DESIGNED		DATE
DRAWN	R.J.L	02/01/94
CHECKED	M.M.	04/10/94
APPROVED	K.V.E	21/8/95

NAME
ANODE CONDITION
MONITOR INSTALLATION
INSTRUCTIONS

SCALE NONE | No: A2- 63974 | 0

HYDRAULIC FLUIDS

		TOTAL OIL VOLUME in Litres	USED ON JET MODEL
SEASTAR MANUAL HYDRAULIC STEERING			
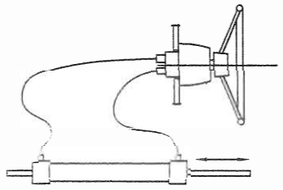	FLUID HYDRAULIC OIL TO MIL STD. H-5606C DO NOT USE: BRAKE FLUID HEAVIER VISCOSITY FLUIDS	N/A	HJ241 HJ273 HJ291 HJ321
	EXAMPLES SEASTAR: HA5430 SHELL: AERO SHELL FLUID #4 ESSO: UNIVIS N15 OR J13 TEXACO: HO15		
WAGNER MANUAL HYDRAULIC STEERING			
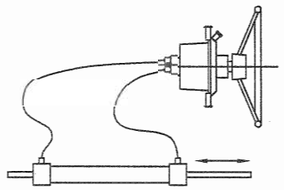	FLUID HYDRAULIC OIL OF VISCOSITY: I.S.O. GRADE 32 DO NOT USE: BRAKE FLUID HEAVIER VISCOSITY FLUIDS	N/A	HJ362 HS363 HJ391 HM422 HM461 HM521 HM571
	EXAMPLES SHELL: TELLUS 32 ESSO: NUTO H32 TEXACO: RANDO HD32 or RANDO HD AZ		
HYNAUTIC REMOTE CONTROL SYSTEMS			
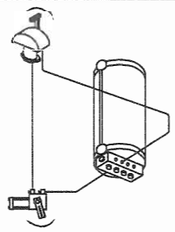	FLUID 50/50 VOLUMETRIC MIXTURE OF: ETHYLENE-GLYCOL / DISTILLED WATER DO NOT USE: BRAKE FLUID or HYDRAULIC OILS.	N/A	HJ362 HS363 HJ391 HM422 HM461 HM521 HM571
	EXAMPLES HYNAUTIC: MCO-03		
HYDRAULIC SYSTEMS with JHPU			
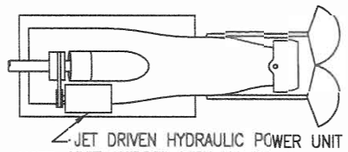 JET DRIVEN HYDRAULIC POWER UNIT NOTE: UNIT SHIPPED WITH NO OIL IN HYDRAULIC POWER UNIT, BUT OIL IN COOLER & CONTROL SYSTEM. H.P.U OIL VOLUME = 4 ltrs.	FLUID HYDRAULIC OIL OF I.S.O. 3448 VISCOSITY GRADE. VISCOSITY:- 60cSt @ 40°C 10cSt @ 100°C DO NOT USE: BRAKE FLUID HEAVIER VISCOSITY FLUIDS	5.25	HJ321
		5.25	HJ362
		?	HS363
		7.5	HJ391
		7.5	HM422
	EXAMPLES SHELL: TELLUS 46 CASTROL: HYSPIN AWS 32/68 MOBIL: DTE 25 B.P.: HLP HM46	7.5	HM461
		7.5	HM521
		7.5	HM571
		21	HM651
		21	HM721
		21	HM811
HYDRAULIC SYSTEMS with SAGINAW HPU			
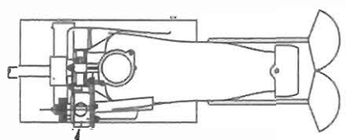 JET DRIVEN HYDRAULIC POWER UNIT NOTE: UNIT SHIPPED FILLED WITH OIL.	FLUID MINERAL BASED HYDRAULIC OIL. VISCOSITY:- 50cSt max. @ +40°C 7cSt min. @ +100°C DO NOT USE: BRAKE FLUID HEAVIER VISCOSITY FLUIDS	1	HJ213 HJ241
		1.2	HJ273
		1.2	HJ291
	EXAMPLES SHELL: DONAX TM Auto Transmission Oil. DEXRON 111 Auto Transmission Oil. MOBIL: ATF Auto Transmission Oil. CASTROL: TQ DEXRON 111 Auto Transmission Oil. ESSO: PSF #91423 Power Steering Fluid TEXACO: TL-11872 Power Steering Fluid TL-15216 Power Steering Fluid		

PROJECTION

BEARING HOUSING LUBRICANT

JET UNIT	VOLUME (litres)	
HJ211	0.3	
HJ212	0.3	
HJ241	0.3	
HJ273	0.5	
HJ291	0.5	
HJ321	0.5	
JET UNIT	**VOLUME (litres)**	
HJ362	0.7	
HS363	1.4	
HJ391	1.4	
HJ402	1.4	
HM422	1.4	
HM461	1.4	
HM521	2	
HM571	3.5	
HM651	5	*5
HM721	7	*5
HM811	10	*5

GREASE LUBRICATED

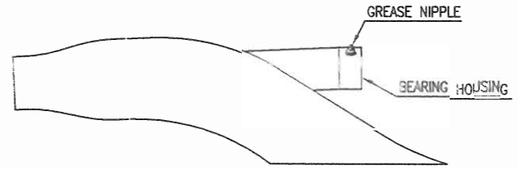

GREASE TYPE: Marine Extreme Pressure Grease

EXAMPLE: SHELL; Alvania R2

OIL LUBRICATED

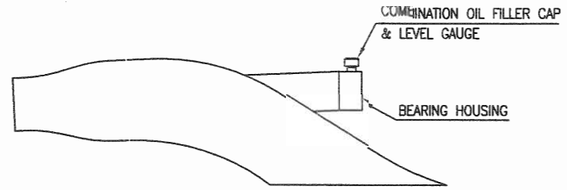

OIL TYPE: I.S.O. Type HM (Enhanced Anti-Wear Type)
Multigrade Oil to I.S.O. viscosity grade 32/68
OR
Oil to I.S.O. viscosity grade 46

EXAMPLE: SHELL: Tellus 46
CASTROL: HYSPIN AWS 32/68

NOTE: JET UNIT OIL VOLUMES SHOWN ON THE RIGHT THUS *5, ARE FITTED WITH BEARING HOUSING COOLER SYSTEM & VOLUMES SHOWN ARE THE COOLER VOLUME.

NOTE: JET UNIT OIL LEVELS WILL VAIRY DEPENDING ON DEADRISE OF HULL.
OIL VOLUMES SHOWN ARE FOR CENTRALLY MOUNTED UNITS NO DEADRISE.
OIL LEVELS MUST BE WITHIN MARKS SHOWN ON DIPSTICK.

REF	NO.	BY	DATE	AMENDMENTS
CL127	H	J.W.	17.1.00	EXTRA OIL EXAMPLES ADDED TO JHPU LIST CL3646, 3740, 3831, 066, 084, 104

JET

C.W.F.HAMILTON & CO. LTD. CHCH. NZ.

MATERIAL N/A

√ = N9 EXCEPT AS STATED

UNLIMITED DIMENSIONS TO BE ± N/A

MATL CERT N/A

DESIGNED DATE

DRAWN R.J.L. 21-12-93

CHECKED

APPROVED

NAME RECOMMENDATIONS, for LUBRICANTS & OILS

SCALE N/A

No: A3-85018

H

85018 H

85080 B

Weld Procedure For Welding Cast Intake Blocks Into Aluminium Hulls

. Welds: – To be full penetration and conform to ABS rules for Aluminium vessels section 30 (Welding in Hull construction).

2 Welder Qualification: – Properly qualified welder to ABS Welder qualification (Q1) or equivalent, in downhand or overhead.

3. Inspection: –Inspection to be done by a qualified welding inspector.

4. Site: –The site must be
(a) dry and free from steel dust or any other contaminates that could effect the finished weld condition.
(b) sheltered from draughts to prevent disturbance to shielding gas.

5. Welding Process: – M.I.G.

6. Welding Wire: – Casting to Plate – use 4043 Filler Wire
(LM6M) (5086 or 5083)

7. Shield Gas: – Argon or helium..

8 Weld position: – Flat downhand. Turn hull over to do the other side flat downhand.
– If hull cannot be turned to provide a downhand position for both inboard and outboard welds then a backing strip will be necessary. Weld downhand from one side only, then grind off backing strip.
– or use certified overhead welder.

9. Weld prep: – If Hull can be turned over use double vee butt weld prep.

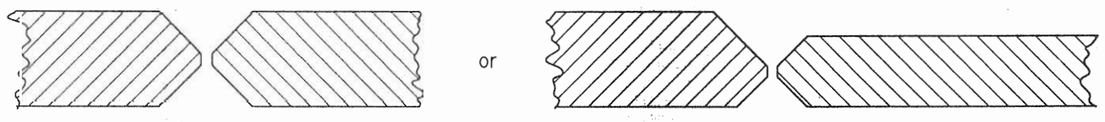

– If hull cannot be turned over use a single vee butt weld prep with backing strip.

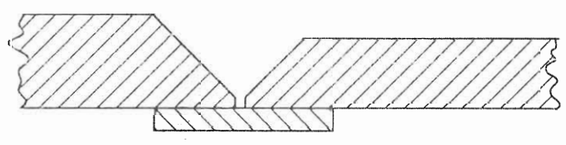

0. Cleanliness: – Dress all surfaces to be welded just prior to welding to remove surface oxides.

1 Preheat: – Remove chill 50° – 60° C (120° – 140° F)

2 Support – A rigid strong back should be clamped to the block during welding to prevent any distortion of the block

3. Weld runs
– Multipass runs may be necessary depending on plate and casting thickness.
– Stitch 75mm with 75mm gaps for first 2 runs to help eliminate distortion of block.
– Grind stop starts before filling in
– Subsequent runs may be full length runs

4. Back gouging: –Chipping, Routing, Milling, Grinding or other suitable methods are to be employed at the root or underside of the weld to obtain sound metal before applying susequent beads. Grind stop/start craters.

5. Visual Inspection of Welds
Acceptance Level:
– No cracks, Porosity, Lack of fusion, cold laps or undercut.Use dye penetrant to check outer surface of welds and intermediate weld passes, such as root passes, and also to check back–chipped ,ground or gouged joinnts prior to depositing subsequent passes, Any die penetrant used is to be thoroughly removed from area before rewelding.
– Dye penetrant is not to be used where complete removal of the dye penetrant material cannot be assured.

REF	NO.	BY	DATE	AMENDMENTS
CL3715	B	P.S.	24/9/96	REDRAWN ON CAD.OVERHEAD OPTION ADDED.
CL3607	A	P.S.	6/6/95	ISSUED FOR PRODUCTION.
	0			

JET 211 212 213 241 273 272 291 321 363 391

C.W.F.HAMILTON & CO. LTD. CHCH. NZ.

MATERIAL

MATL. CERT
DESIGNED
DATE
DRAWN P.A.S. 6/6/95
CHECKED
APPROVED AWE 30-10-96

∇ = N9 EXCEPT AS STATED
UNLIMITED DIMENSIONS TO BE ±

NAME
WELD PROCEDURE for WELDING CAST INTAKEBLOCKS into ALUMINIUM HULLS

SCALE
No. A3–85080
B

PROJECTION

PROJECTION

THREAD & JOINT LOCKING

STUDS AND THREADED BUSHES	LOCKING AGENT
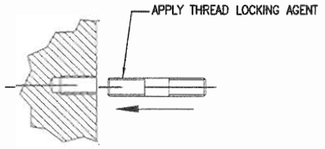	
BUSHES & SLEEVES	**LOCKING AGENT**
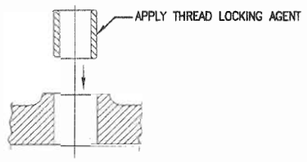	
SET SCREWS & GRUB SCREWS	**LOCKING AGENT**
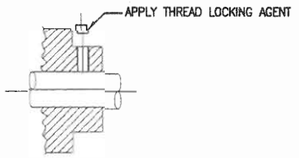	
TAILPIPE FAIRING (WITHOUT LOCKING DEVICE)	**LOCKING AGENT**
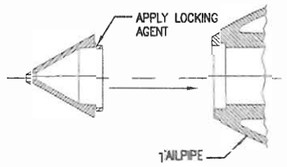	
MAINSHAFT NUTS (WITHOUT LOCKING DEVICE)	**LOCKING AGENT**
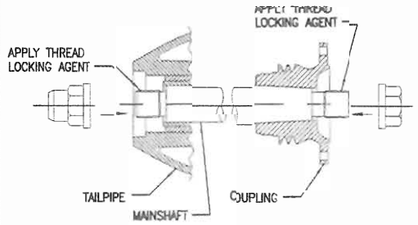	
HYDRAULIC FITTINGS & CYLINDERS	**LOCKING AGENT**
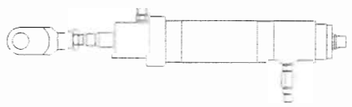	

A

JOINT LUBRICATION

NUTS ON STUDS & BOLTS (IN WATER)	LUBRICANT
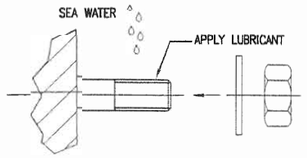	 ANTI SEIZE LUBRICANT (NOT COPPER OR GRAPHITE BASED) OR: MARINE GREASE
TAPERS	**LUBRICANT**
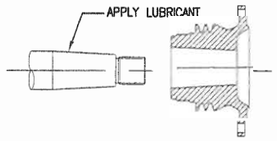	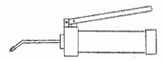 GREASE: MARINE MULTI PURPOSE EXTREME PRESSURE TYPE
STEEL TO STEEL	
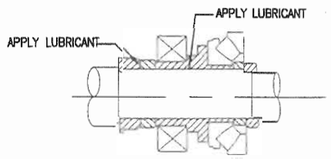	
O-RINGS	
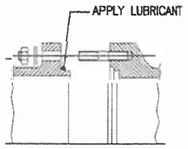	

THREAD TIGHTENING TORQUES

SIZE	N.m	lbs.ft	GRADE 316 STAINLESS STEEL STUDS (NON MAGNETIC)
M6	5	4	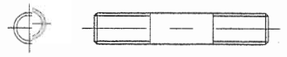
M8	12	9	
M10	24	18	
M12	40	30	
M16	60	45	
M20	120	90	

SIZE	N.m	lbs.ft	SAF 2205 STAINLESS STEEL STUDS (MAGNETIC)
M12	54	40	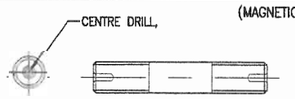
M16	130	95	
M20	260	190	
M24	450	330	

NOTES:

1. ENSURE ALL THREADS ARE CLEAN & DRY OR LIGHTLY LUBRICATED AS STAINLESS STEEL THREADS HAVE A TENDENCY TO "PICK UP"
2. RECOMMENDED LUBRICANT IS A MARINE GRADE MULTIPURPOSE EXTREME PRESSURE GREASE. EXAMPLE: BP ENERGREASE MM-EP2

TIGHTENING TORQUES

SCREW SIZE	N.m	lbs.ft	SKF KMT/KMTA NUT LOCKING SCREWS
M6	5	4	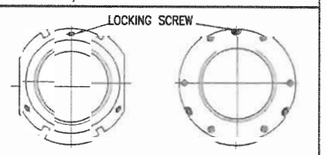
M8	12	9	
M10	20	15	

A NOTE 3:

FOR SPECIFIC INSTRUCTIONS ON THREAD AND JOINT LOCKING, JOINT LUBRICATION AND THREAD TIGHTENING TORQUES, REFER TO THE RELEVANT JET UNIT ASSEMBLY DRAWING. DETAILED INFORMATION ON THE APPLICATION OF LOCTIE PRODUCTS IS CONTAINED ON DRAWING 85144.

REF	NO.	BY	DATE	AMENDMENTS
CL188	A	P.M.W	30.05.01	NOTE 3 ADDED, 680 LOCTITE ADDED TO BUSHES & SLEEVES
CL104	0	R.J.L	18.08.99	ISSUED FOR PRODUCTION.

JET

C.W.F.HAMILTON & CO. LTD. CHCH. NZ.

MATERIAL: N/A

MATL CERT: N/A

DESIGNED: DATE:

DRAWN: R.J.L. 18.08.99

CHECKED:

APPROVED: K.V.E.

√ = N9 EXCEPT AS STATED

UNLIMITED DIMENSIONS TO BE ± N/A

NAME: RECOMMENDATIONS for FASTENER LOCKING, TORQUES & THREAD LUBRICATION.

SCALE: N/A

No: A3-85113 A

85113 A

DO NOT SCALE THIS DRAWING.

PROJECTION

ALL DIMENSIONS IN mm. UNLESS OTHERWISE SHOWN.

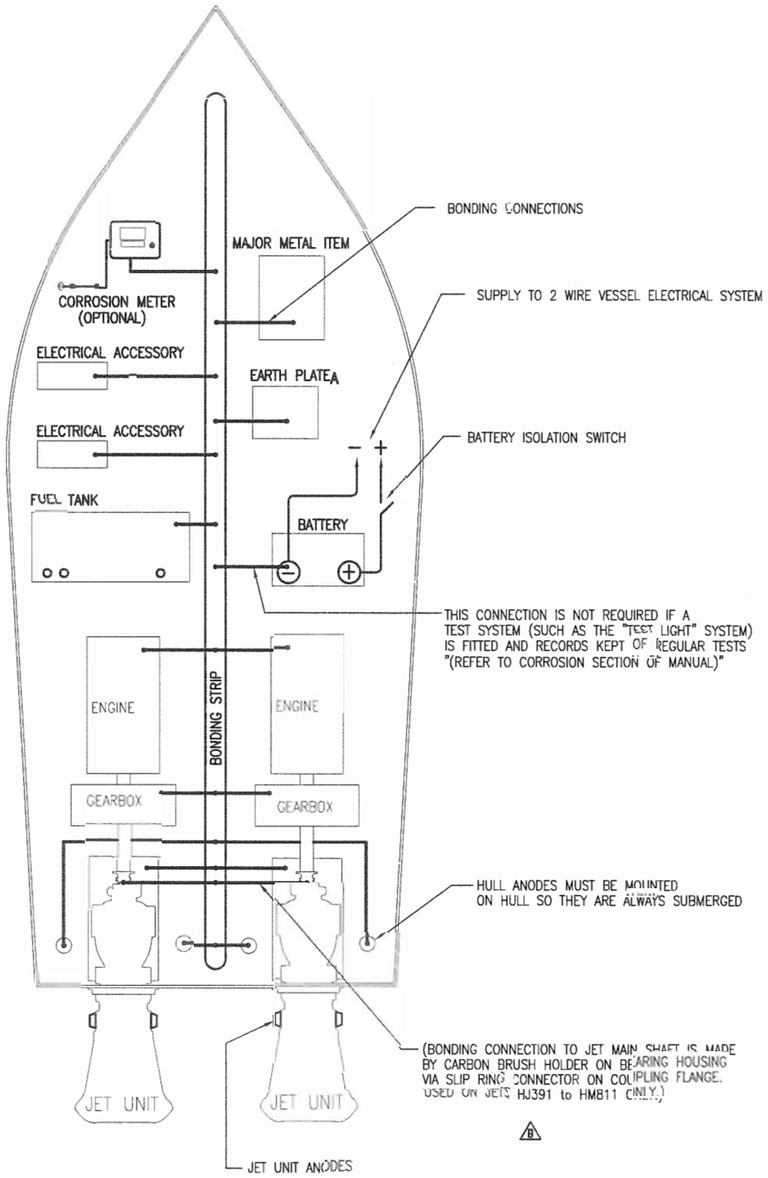

EARTH BONDING SYSTEM FOR ALUMINIUM, G.R.P. AND WOODEN HULLS

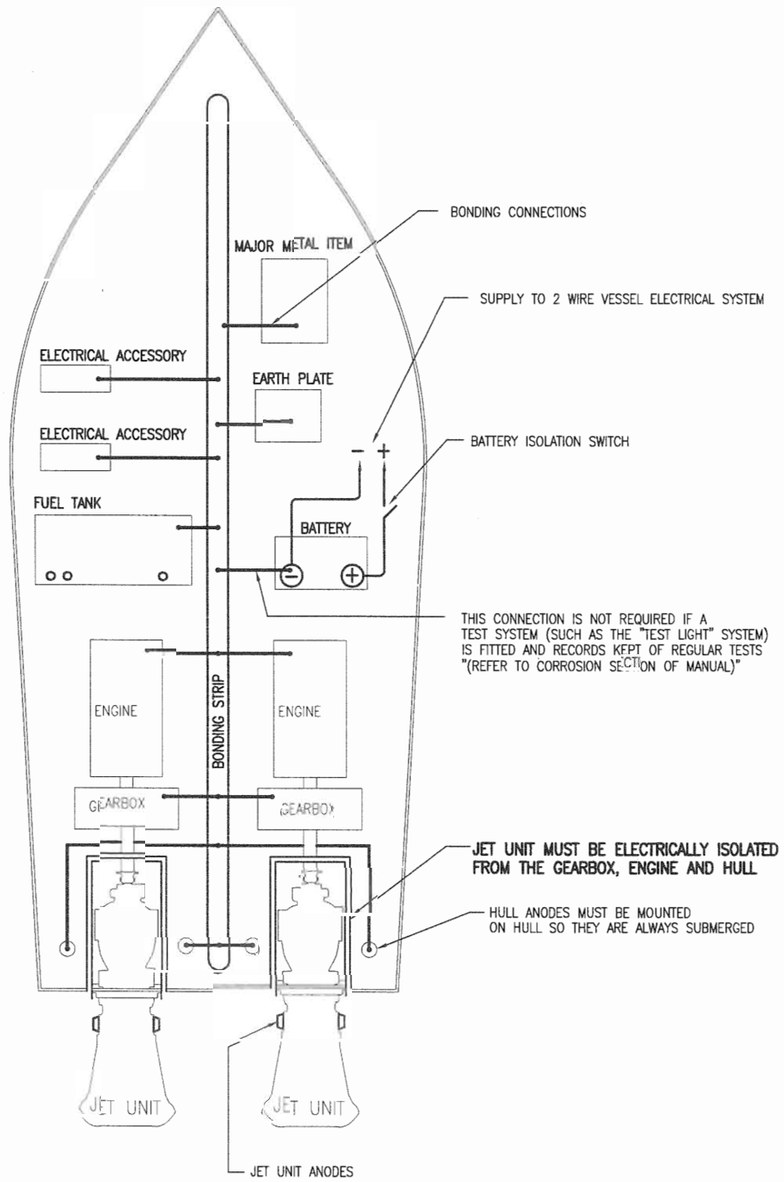

EARTH BONDING SYSTEM FOR STEEL HULLS

NOTE: APPLYING TO BOTH DIAGRAMS ABOVE

ANODES PLACED ON THE CRAFT TRANSOM WILL BE "DRY" AND THUS NOT ACTIVE WHEN THE CRAFT IS AT PLANING SPEEDS THEREFORE ANODES SHOULD BE PLACED UNDER THE HULL WHERE THEY WILL BE "WET" AT ALL TIMES.
THESE ANODES SHOULD BE UNIFORMLY SPACED OVER THE WETTED HULL LINES. THEY SHOULD BE RECESSED INTO THE HULL OR STREAMLINED IN SHAPE TO MINIMISE RESISTANCE.
THEY SHOULD NOT BE LOCATED DIRECTLY AHEAD OF THE JET UNIT INTAKE AS THEY MAY DISTURB THE INLET FLOW.

REF	NO.	BY	DATE	AMENDMENTS
CL118	B	R.J.L	23.11.99	SHAFT BONDING NOTE CLARIFIED.
CL108	A	R.J.L	16.09.99	SPELLING CORRECTED.
CL104	0	R.J.L	18.08.99	ISSUED FOR PRODUCTION.
JET ALL				

C.W.F.HAMILTON & CO. LTD. CHCH. NZ.

MATERIAL N/A

√ = N9 EXCEPT AS STATED

UNLIMITED DIMENSIONS TO BE ±

		DATE
MATL CERT		
DESIGNED		
DRAWN	R.J.L	16-08-99
CHECKED	L.E.A	18.08.99
APPROVED	K.V.E	

NAME: EARTH BONDING SYSTEM RECOMMENDATIONS AND LAYOUT

SCALE: -

No: A2-85114

B

DO NOT SCALE THIS DRAWING REMOVE ALL SHARP CORNERS ALL DIMENSIONS IN mm. UNLESS OTHERWISE SHOWN PROJECTION

LOCTITE GUIDE

Retaining Compounds

Loctite Grade	Description	Colour	Primer/ Activator	Bore Condition	Bush Material	Bush Finish	Primer/Activator Applied to	Primer/Activator Dry Time	Cure Time (with Primer/Activator @ 22 deg C)	
									Fixture	Full hours
325	Anaerobic Structural Adhesive	Amber	7075 Activator	Bare Alum	D-Glide	Turned	Bore	3 min	30 mins	24 hours
325	Anaerobic Structural Adhesive	Amber	7075 Activator	Bare Alum	SS	Sanded	Bore	3 min	30 mins	24 hours
325	Anaerobic Structural Adhesive	Amber	7075 Activator	Painted	D-Glide	Turned	Bush	3 min	30 mins	24 hours
325	Anaerobic Structural Adhesive	Amber	7075 Activator	Painted	SS	Sanded	Bush	3 min	30 mins	24 hours
680	Anaerobic Retaining Adhesive	Green	7471 Primer T	Painted	D-Glide	Turned	Bush	30-70 sec	30 mins	24 hours
680	Anaerobic Retaining Adhesive	Green	7471 Primer T	Painted	SS	Sanded	Bush	30-70 sec	30 mins	24 hours
680	Anaerobic Retaining Adhesive	Green	7471 Primer T	Painted	Bronze	Sanded	Bush	30-70 sec	30 mins	24 hours
680	Anaerobic Retaining Adhesive	Green	7471 Primer T	Bare Alum	SS	Sanded	Bush	30-70 sec	30 mins	24 hours

Stud and Nut Locking and Thread Sealing Compounds

Loctite Grade	Description	Colour	Primer/ Activator	Primer Applied to	Primer Dry Time	Loctite Applied to	Cure Time (with Primer/Activator @ 22 deg C)	
							Fixture	Full hours
222	Low Strength Anaerobic Threadlocker	Purple	7471 Primer T	Stud	30-70 sec	Male Thread	1 hour	24 hours
243	Medium Strength Anaerobic Threadlocker	Blue	7471 Primer T	Male Thread	30-70 sec	Male Thread	3 hours	24 hours
262	High Strength Anaerobic Threadlocker	Red	7471 Primer T	Stud	30-70 sec	Both	1 hour	24 hours
567	Anaerobic Pipe Thread Sealer	White	7471 Primer T	Male Thread	30-70 sec	Male Thread	3 hours	24 hours

APPLICATION INSTRUCTIONS

1 In general Activator is **NOT** to be applied to any painted surface.
2 The Primer or Activator are to be applied to non-active surfaces (eg aluminium or stainless steel) rather than active surfaces (eg bronze).
3 All bare aluminium bores are to be degreased with trichlorethylene (in a controlled environment - see note below) or methylated spirits prior to applying Loctite.
4 All bushes to be degreased using acetone, methylated spirits, **NOT** paint thinners.
5 For retaining bushes Loctite is to be applied to whole surface of bore and front of bush before fitting. There are to be no dry areas between bush and the bore. Rotate bush when fitting to distribute Loctite evenly.
6 For press fitted bushes, coat entire bush and bore with Loctite before pressing home.
7 For details of where Loctite is used, refer to relevant jet unit assembly drawings.

IMPORTANT NOTES.

1 All Primers and Activators are highly flammable.
2 The flash point of the Loctite retaining and adhesive products is above 93 degrees C.
3 All painted bores are to be fully cured before the application of Loctite. At least 24 hours is required between application of paint and Loctite.
4 Primers or Activators are to be used in all retaining applications. For stud and nut locking, Primers is only used to shorten the cure time.
5 Note that all Loctite 325 **must** be used with 7075 Activator as it does not cure without it.
6 Loctite 680 will not cure on zinc chromate etch primed bores, but will cure on zinc phosphate primed surface (Intercure 200)
7 Fixing and full cure times for Loctite will be increased at reduced temperatures.
8 Refer to relevant product data sheets for guidelines on the safe use and handling of Loctite products and cleaning solvents.

REF	NO.	BY	DATE	AMENDMENTS
CL165	A	R.J.L	01.12.00	NOTE: 3 – in controlled environment added & 4 – MEK removed.
CL160	0	R.J.L	24.10.00	ISSUED FOR PRODUCTION.

JET ALL

C.W.F.HAMILTON & CO. LTD. CHCH. NZ.

MATERIAL

MATL CERT

DESIGNED M.J.H DATE

DRAWN R.J.L 14.09.00

CHECKED P.R 18.10.00

APPROVED K.V.I 24.10.00

√ = N9 EXCEPT AS STATED

UNLIMITED DIMENSIONS TO BE ±

NAME LOCTITE APPLICATION GUIDE CHART. for ALL JETS.

SCALE INC. A3-85144 A

A

85144